OMRAN TAHVIEH

Heating , Ventilation And Air Conditioning

ISHRAI

SATSA

ISO 14001:2004

ISO 9001:2008

OHSAS 18001:2007

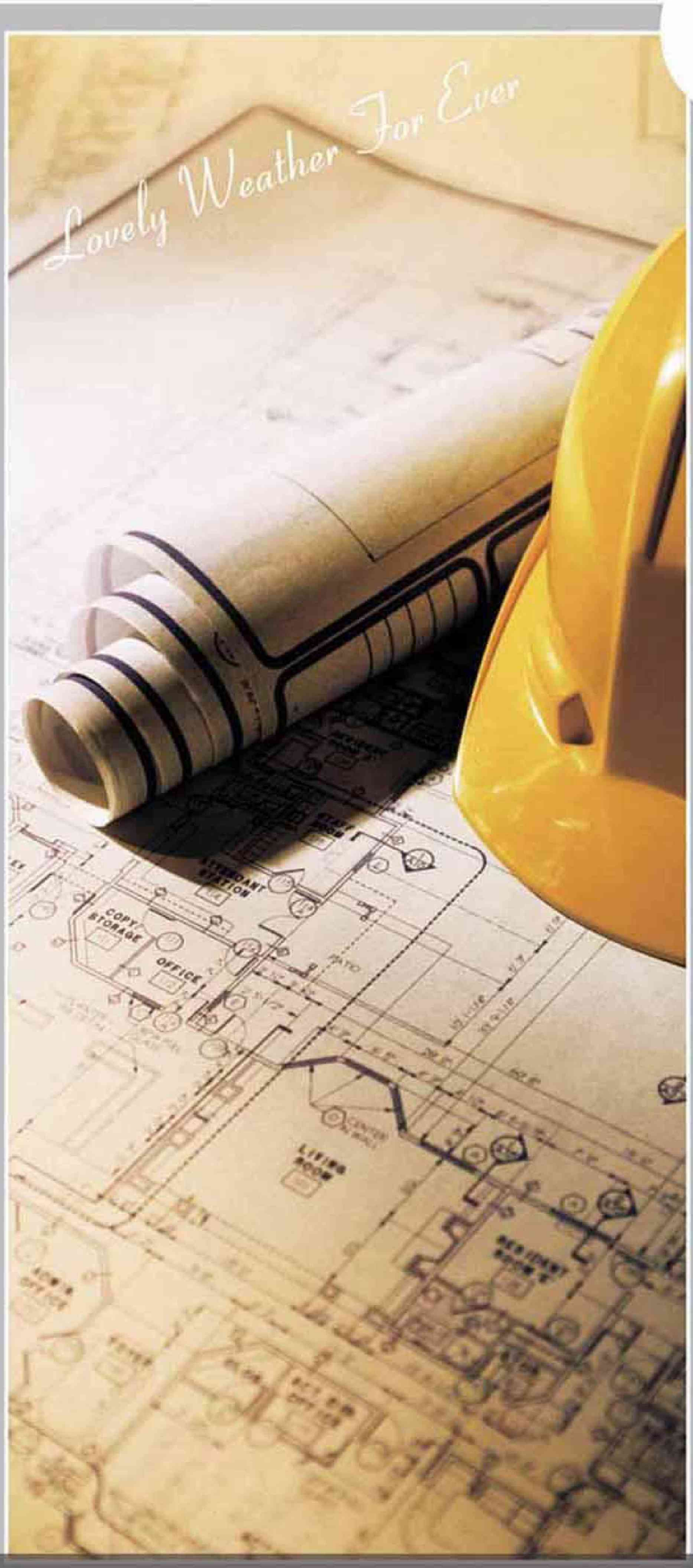

www.omrantahvieh.com
info@omrantahvieh.com

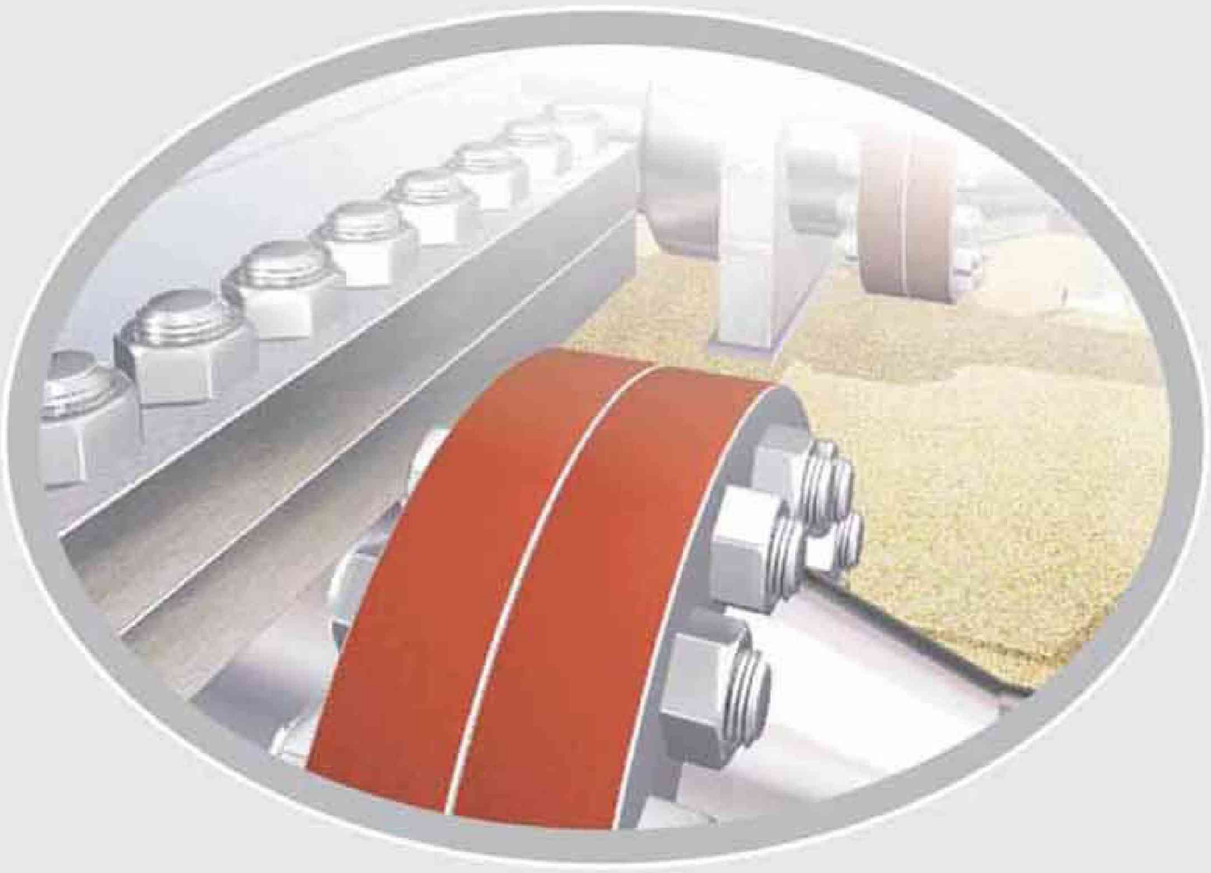

OMRAN TAHVIEH

Heating , Ventilation And Air Conditioning

OMRAN Tahvieh as a manufacturey company for good required air conditioning, ventilation and heating technology has been projecting and manufacturing a wide range of units.

Most of the products are produced by the use of modern technology production.
OMRAN Tahvieh arises from the experience matured by a group of specialists in air conditioning market in over many years of activity. Our company has many times faced, studied and solved all the aspects related to the manufacturing of air conditioning units for air movement and treatment with taking care of using first quality materials and technically correct and economically competitive sizing of the units.

OMRAN Tahvieh's technical department is at your disposal to find the best solution for each application out of the standard available.
OMRAN Tahvieh's constant developments ensure the highest standards of quality; the declared performances are certified by tests carried in by independent in statues.

Lovely Weather For Ever

OMRAN TAHVIEH

Contents

Liquid Chiller (nOWLC and nOALC Series)	1
Air Cooled Chillers	2
Modular Packaged Air Conditioners	3
OIMT Cooling Towers	4
Series 3000 Cooling Towers	5
Air Handling Unit	6-7
OTC Series (400-1600 TR)	8
OMB F.R.P Cooling Tower	9
OFCC Cooling Towers	10
OFCB Series (10 - 1200 TR)	11
OSGF Series Cooling Towers	12
Series V Closed Circuit Cooling Tower	13
Series O10 - Series O15	14
Series Cubic Tower	15
OCC Series (15-300 TR)	16
Condensing Unit (OCU 240 - 840)	17
Condensing Unit (OCU 030 - 120)	18
Single Packaged Roof Top Air Conditioners	19
OFCB-IND-DZ Dust Proof Cooling Towers	20
Air Cooled Water Chillers (R-134a)	21
Industrial Unit Heater (OUI Series)	22
Unit Heater (Hot Water & Steam)	23
Condensing Unit (OCU150 - 360)	24
Plate Heat Exchanger	25
OACC Air Cooled Condenser	26-27
Packaged Industrial Cooler	28
OADF Direct Drive Dry Type Fluid Coolers	29
Packaged Industrial Cooler-Heater(Indirect Fire)	30
ZENT (OZ Series)	31
OACF Centrifugal Air Cooled Condensers	32
Class O - 160	33
Packaged Semi-Industrial Cooler	34
Air Washer Cleaner Cooler	35
Air Curtain (OR4 Series)	36
OVTL - Open Cooling Tower (Low Profile)	37
Classic Fan Coils	38-39
Ducted Fan Coils	40
Luxury Exposed Fan Coils	41
Hygienic Air Handling Unit	42

ISHRAI SATSA Member

Liquid Chiller (nOWLC and nOALC Series)

Features and Benefits

OMRAN cold generator reciprocating Liquid chiller are designed and built to provide reliable, efficient performance and easy serviceability. Complete factory run testing helps ensure every OMRAN chillers starts easily and operates reliable. The compressor alone undergoes a continuos series of demanding production checks such as proof and leak test and static electrical and multiple leak - back checks. These are Followed by several run tests to confirm proper operation of the chiller. OMRAN 10 through 240 ton cold generator chillers are designed with service personal in mind. Compressor are standardized and assembled for easy access. OMRAN chillers use, exclusively Carrier and Copeland high efficiency semi - hermetic components, heaving high technology design. OMRAN chillers are equipped with multiple compressor connected in parallel in order to achieve greater operating flexibility. By cycling individual compressors the system capacity can be with full power saving for the compressors in operation by using the system of parallel compressors operation

uncomplicated unload start is achieved by a simple time delay starting of single compressors as opposed to a compressor start with the total capacity.

Capacity Ratings - Water Cooled Chillers

Unit Size	Evaporator leaving chilled water temperature = 45 ° F																	
	Condenser Entering water temp.(° F), Condenser temp. Rise 10° F																	
	75						85						95					
	C.Cap		Ch.W		Condm		C.Cap		Ch.W		Cond.W		C.Cap		Ch.W		Cond.W	
	TR	PI	Gpm	PD	Gpm	PD	TR	PI	Gpm	PD	Gpm	PD	TR	Pi	Gpm	PD	Gpm	PD
10WLC-10	10.3	7.5	25.3	3.1	28.7	6.2	9.6	7.8	22.8	2.8	27.9	5.9	8.8	8.4	21.3	2.5	26.7	5.6
10WLC-15	13.6	9.6	3.4	3.7	38.4	5.5	12.8	10.5	31.2	3.4	38.1	5.2	11.8	11.2	28.6	2.3	38.0	4.6
10WLC-20	16.4	11.1	39.5	3.7	48.8	6.5	15.5	12.1	37.0	3.2	45.0	6.0	14.6	13.0	35.0	2.6	44.0	5.6
10WLC-25	21.0	14.0	50.1	4.4	58.3	10.1	19.4	15.9	46.6	3.8	56.1	9.4	18.4	16.7	44.5	3.1	55.0	8.8
10WLC-30	24.2	17.3	58.8	6.2	70.3	7.8	24.1	18.8	55.5	5.5	68.0	7.1	22.0	20.8	53.2	4.8	65.5	6.2
10WLC-35	31.0	21.6	73.0	10.8	88.8	5.6	29.0	23.3	70.1	8.9	85.0	5.5	27.3	26.0	64.4	7.5	82.0	5.0
10WLC-40	35.1	25.7	84.8	6.6	103.4	5.7	33.0	28.0	78.8	5.7	97.0	5.2	31.0	30.4	74.0	5.1	93.2	4.8
10WLC-50	44.2	29.8	107.7	10.8	130.0	7.9	42.1	32.9	102.6	10.1	126.3	6.9	40.0	36.0	94.7	9.6	115.0	6.2
10WLC-60	54.0	36.6	130.1	9.3	150.0	9.7	50.1	40.8	120.3	8.9	148.1	9.3	46.3	44.0	110.0	7.2	143.1	8.1
20WLC-30	27.2	19.1	64.7	6.8	77.3	5.6	25.6	10.6	60.9	6.1	76.6	5.2	24.0	23.0	57.3	5.4	72.0	4.8
20WLC-40	32.7	22.0	78.2	6.9	92.3	6.3	31.0	24.0	73.4	5.9	90.0	6.0	29.1	25.9	70.0	5.0	87.2	5.8
20WLC-50	40.9	27.9	98.1	9.3	118.9	10.0	38.8	30.6	92.4	8.8	114.0	9.4	36.3	33.4	88.0	8.2	110.0	8.8
20WLC-60	49.5	34.6	118.2	14.4	140.5	7.7	46.4	37.6	110.9	12.9	136.5	7.2	43.4	40.0	104.0	11.7	130.0	6.8
20WLC-70	61.0	43.3	148.2	18.8	176.2	5.6	57.9	47.2	138.4	18.4	170.2	5.5	53.7	51.8	130.5	18.4	165.0	5.5
20WLC-80	68.5	51.6	166.3	17.6	199.5	5.3	64.5	55.7	155.6	17.3	190.0	4.9	60.8	60.5	150.4	16.9	185.2	4.5
20WLC-100	87.9	59.7	212.2	16.2	255.1	7.9	84.4	65.3	202.2	14.9	250.0	6.7	78.2	77.9	188.7	13.4	240.0	6.7
20WLC-120	106.2	72.9	258.3	15.9	306.9	9.7	100.0	80.1	249.1	14.1	300.0	9.3	91.4	88.0	220.2	12.9	285.5	8.5
30WLC-60	49.0	32.9	118.8	13.8	138.2	6.4	46.4	35.9	110.0	12.4	134.4	6.0	43.6	38.8	104.2	10.7	130.0	5.6
30WLC-75	61.0	41.8	150.1	18.5	172.3	10.0	57.8	46.0	140.0	16.3	168.1	9.4	54.4	50.0	130.0	14.6	160.0	8.8
30WLC-90	73.2	51.6	175.0	15.6	207.4	7.5	78.0	55.8	165.5	13.5	200.5	7.0	65.6	60.0	156.0	12.2	195.5	6.8
30WLC-105	91.3	64.8	220.0	15.4	260.0	5.5	85.0	70.2	206.7	13.8	250.0	5.5	80.3	77.5	192.0	12.4	240.0	5.5
30WLC-120	102.7	76.2	250.0	19.2	290.0	5.4	95.9	83.0	230.6	17.6	280.0	4.9	89.2	90.0	215.0	15.5	270.0	4.5
30WLC-150	131.5	90.0	315.2	20	380.0	7.9	125.3	97.9	300.0	18.8	370.0	7.0	116.3	108.5	280.0	16.1	360.0	6.3
30WLC-180	158.0	109.0	380.0	20.5	450.0	9.8	148.5	120.2	360.0	19.0	440.0	9.3	138.0	131.4	330.0	16.0	430.2	8.2
40WLC-80	66.0	43.8	158.0	16.7	183.4	5.3	61.5	47.3	150.0	15.2	175.0	4.8	58.0	51.5	138.8	13.6	170.0	4.7
40WLC-100	82.4	55.8	200.0	9.7	235.0	7.7	77.7	60.6	190.0	9.0	225.5	6.9	73.0	66.4	175.0	7.6	220.0	6.8
40WLC-120	98.2	68.6	235.0	10.5	280.0	9.5	93.0	75.0	225.0	9.5	260.0	9.4	86.8	80.5	210.0	8.4	260.5	8.9
40WLC-140	121.5	85.8	299.0	19.0	350.0	6.9	114.0	96.0	270.4	17.8	335.0	6.5	107.2	104.0	260.0	17.0	325.0	6.5
40WLC-160	136.4	101.8	330.0	17.4	390.5	8.8	128.9	110.5	305.5	15.5	380.0	7.7	119.8	120.1	290.0	13.9	356.0	7.4
40WLC-200	174.5	119.5	418.9	17.6	500.6	10.8	167.4	130.4	400.0	16.5	490.0	10.5	156.4	144.2	370.0	13.5	470.0	9.5
40WLC-240	210.4	144.3	506.2	19.3	600.0	11.5	197.0	160.6	470.0	17.8	590.0	10.9	182.5	175.0	440.0	14.5	565.5	9.6

Rating Table Based on chilled and condenser water temp. Changed (Δt)10 °F (5.5°C).

Subject To Modification without notice

OMRAN TAHVIEH

Omran Tahvieh Industrial Co.

Heating , Ventilation And Air Conditioning

Air Cooled Chillers

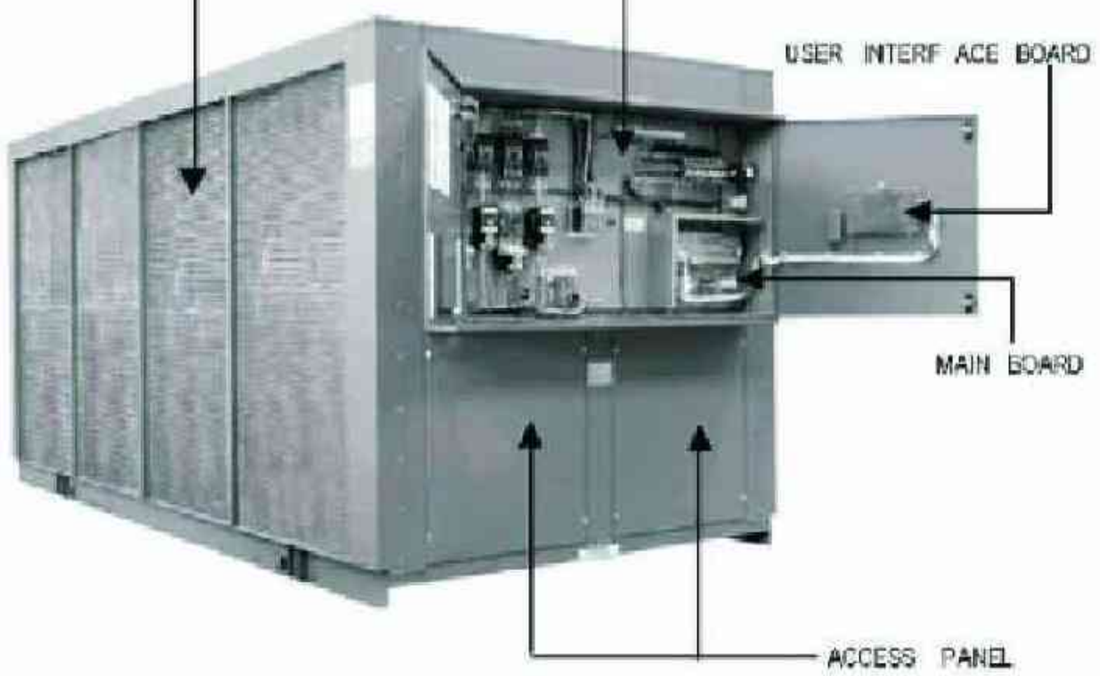

1, 2, 3 & 4 Basic (Series)	5, 6 & 7 Nominal Cooling Capacity (Tons)	8 Electrical Supply (V - Ph - Hz)	9 Compressor Type	10 Condenser Coil	11 Controls	12 Accessories	13 Options
OLAC CLASSIC AIR COOLED WATER CHILLERS	010 015 025 030 035 040 050 060 070 080 100 120 140 160 180 200 220 240	H: 208/230 - 3 - 60 M: 380 - 3 - 60 (4 WIRE) F: 460 - 3 - 60 L: 380/415 - 3 - 50 (4 WIRE)	H: Semi-Hermetic Reciprocating S: Screw	A: Aluminum Fin B: Coated Aluminum Fin C: Copper Fin	A: Standard B: Microprocessor	A: Standard* B: Water Flow Switch C: Spring Isolators D: Hot Gas Bypass E: B + C F: B + D G: C + D H: B + C + D	A: Standard* B: Compressor Circuit Breaker

Subject To Modification without notice

FEATURES

*These OALC air cooled water chillers offer The ultimate combination of Energy saving design, superior engineering features and flexibility of application as required by today's market.

*These chillers incorporate the newest advanced controller. This controller monitors analog and digital inputs to achieve precise control & protective functions of the air Cooled water chiller units. This microprocessor controller is complete with all the hardware and software necessary to control the Chiler unit and Insures its efficiency and reliability.

*Compact unit design and excellent serviceability.

*All Packaged chillers incorporate compact water coolers with low fin copper tubes and expanded into a steel tubular sheet which offer officiant water flow as well as heat transfer design resulting in optimal unit performance.

*All units incorporate separate sub cooler circuit which is integral to the condenser surface. This additional subcooling circuit provides superior system Performance.

*High energy Efficiency ratio (EER) semi - hermetic reciprocating compressors provided in these units.

*Single point power connection to minimize job site installation cost and time.

*Completely Wired control panel provides all the necessary operating and safety controls.

*All compressors are with independent refrigeration circuits.

*Compressors are either with part winding or across - the - line start depending on the models.

*Low noise condenser fans, direct drive.

*All fans are propeller type, top discharge, provided with protective grille mounted on top panel within the unit casing.

*All condenser fan motors are totally enclosed air over type (TEAO) with class "F" Winding insulation and bear - ings.

ISHRAI SATSA Member

Modular Packaged Air Conditioners

A. GENERAL

The modular packaged unit is a factory assembled cooling or combination heating and cooling single zone unit suitable for mounting on the roof or ground. The packaged unit consists of refrigerant compressors, cooling coil, heating coil (optional), condenser coil, fans, electric heater (optional), control wiring and inter connecting piping - all factory assembled. Unit casing is of rigid construction mounted on pressed steel rail base with lifting holes for overhead rigging. The unit is provided with an integral Weather resistant control panel suitable for remote thermostat control, ready for field Connection to utilities, roof curbs and ducts.

B. UNIT ENCLOSURE

Unit sections are of modular construction with base frame and panels of heavy gaug galvanized steel. Top & bottom base pan, vertical posts, cross channels & supporting brackets joined together bolted. Steel sheet panels are zinc - coated and galvanized by the hot dip process.

C. COMPRESSOR

Scroll compressors are used as standard for models OCPUA240,300, & 360 with an option to use semi - hermetic reciprocating compressors. Semi - hermetic reciprocating compressors are used for all other models. The compressors are equipped with internal motor protection and also provided with vibration isolators. Oil pressure control is provided on units with semi - hermetic compressors only.

D. INSULATION

The air handling section is insulated with fiberglass, or polyroll or polyurethan insulation which will prevent condensation from forming on the casing. Insulation is protected against deterioration and erosion from air currents.

E. EVAPORATOR / CONDENSER / HOT WATER COILS (OPTIONAL)

Coils are of the corrugated fin - and - tube type constructed of seamless copper tubes, mechanically bonded to Aluminum fins. As an option, Corrugated copper Or coated aluminum fins may be provided.

F. AIR COOLED CONDENSING SECTIONS

1. Fans are propeller type, direct drive, upward discharge through tooled formed venturi, provided with protective Grilles mounted on top panel within the unit casing.
2. Motors are totally enclosed air - over type. Motors are firmly Fixed in motor mount.
3. Each compressor has separate condenser coil with safety controls. High, low oil pressure gauges, sight glass, filter drier, compressor Discharge/suction rotolock valve, discharge line muffler and vibration eliminator (for Semi hermetic compressors only) are standard on all models.

G. EVAPORATOR SECTION

DRAIN PAN: Drain pan is provided under the cooling coil and shall incorporate Coupling connection on both ends.

EVAPORATOR FANS: Fans are of centrifugal type with forward curved blades capable of handling Total required air flow & static pressure in the published ranges. The choices of fan section configurations are top, bottom and front supply air arrangements to provide optimum installation flexibility. Fan drive is through adjustable pitch pulleys and V - belt drive. Blower motor is mounted on anti - vibration pads on adjustable base and secured by locking device.

H. MIXING BOX

The standard mixing box has top, bottom or front return air arrangement with fresh air opening is always from the side of the unit. Two inch thick filter racks are provided as standard on all models. Large mixing box is available as an option for 100% side return air and economizer application. Additional accessories such as return and fresh air dampers and rain hood can be provided.

Model Number			OCPUA240	OCPUA300	OCPUA360	OCPUA420	OCPUA480	OCPUA600	OCPUA720	OCPUA840
NOMINAL CAPACITY , TONS - Scroll / Semi hermetic		1	20.8/20.7	25.3/25	28.4/31.8	36	42.2	50	61.4	70.8
NOMINAL CAPACITY , TONS - Scroll / Semi hermetic		2	19.2/18.8	23.2/22.6	26.2/29	32.7	38.4	45.5	56	65
TOTAL UNIT POWER INPUT kW*-Scrol / Semi hermetic		1	26.8/27	31/33.9	29/42.1	49	58.4	66.7	87	101.9
TOTAL UNIT POWER INPUT kW*-Scrol / Semi hermetic		2	31.8/32	36.8/39.1	34.4/48.1	55.8	67.4	75.6	100.3	115.4
EER (ENERGY EFFICIENCY RATIO)-Scrol / Semi hermetic		1	9.3/9.2	9.8/8.8	11.7/9	8.8	8.6	8.9	8.4	8.9
EER (ENERGY EFFICIENCY RATIO)-Scrol / Semi hermetic		2	7.2/7.1	7.5/6.9	9.1/7.2	7	6.8	7.2	6.7	6.8
	COMPRESSOR TYPE(stander)		Scroll	Scroll	Scroll	Semi-hermetic				
	Oil per system 02	Scroll	135	223	223	-	-	-	-	-
		Semi-hermetic	106	106	106	158	158	158	167	167
	Refrigerant		R-22							
	Charge per system (o2)		360	450	540	630	720	900	1080	1260
	CONDENSER FAN TYPE		Propeller							
	Qty-Diameter (inch)		30	30	30	30	30	30	30	30
	Nominal CFM		13200	13200	19800	19800	26400	26400	33000	39600
	Motor HP -RPM		1.5-950	1.5-950	1.5-950	1.5-950	1.5-950	1.5-950	1.5-950	1.5-950
	CONDENSER COIL TYPE		Corrugated fin & tube							
	Tube Dia - Rows		5/8	5/8	5/8	5/8	5/8	5/8	5/8	5/8
	EVAPORATOR BLOWER TYPE		Centrifugal & V-Belt Drive							
	Size(inch)		18*18	18*18	18*18	22*22	22*22	22*22	25*25	25*25
	Nominal CFM		7000	9000	10500	12000	14000	16000	19500	22000
	Motor HP Std./Alt		7.5/10	7.5/10	7.5/10/15	10/15	10/15/20	15/20/25	15/20/25	20/25
	Fan RPM range		700-1200	700-1200	700-1200	700-1200	700-1200	700-1200	700-1200	700-1200
	EVAPORATOR COIL TYPE		Corrugated fin & tube							
	Tube Dia		5/8	5/8	5/8	5/8	5/8	5/8	5/8	5/8
	Total face area (Sq.ft)		22	22	24	24	31.11	31.11	40	40
HIGH PRESSURE SWITCH	Open (PSIG)		450+10	450+10	450+10	450+10	450+10	450+10	450+10	450+10
	Close (PSIG)		360+15	360+15	360+15	360+15	360+15	360+15	360+15	360+15
LOW PRES SURE SWITCH	Open (PSIG)		25+5	25+5	25+5	25+5	25+5	25+5	25+5	25+5
	Close (PSIG)		50+5	50+5	50+5	50+5	50+5	50+5	50+5	50+5
SHIPPING WEIGHT. Kg.			1500	1600	2000	2000	2500	2655	3200	3500

Subject To Modification without notice

Omran Tahvieh Industrial Co.

Heating , Ventilation And Air Conditioning

OIMT Cooling Towers

The OIMT Cooling Tower provides reliable performance over the full range of cooling tower operating conditions through the use of the most modern industrial quality materials and components, factory - assembled in a modular form, erected quickly and accurately on site. The resulting installation combines the advantages of consistent quality and reduced installation time for large - scale industrial and institutional applications.

- Factory-assembled modules
- Industrial quality, heavy-duty,modern materials of construction
- Fast,accurate on-site assembly
- Versatility of selection and layout

Engineering Data

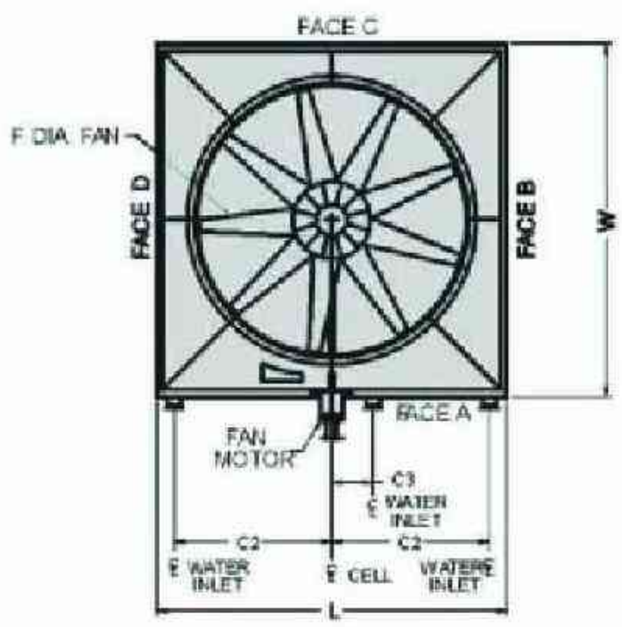

PLAN

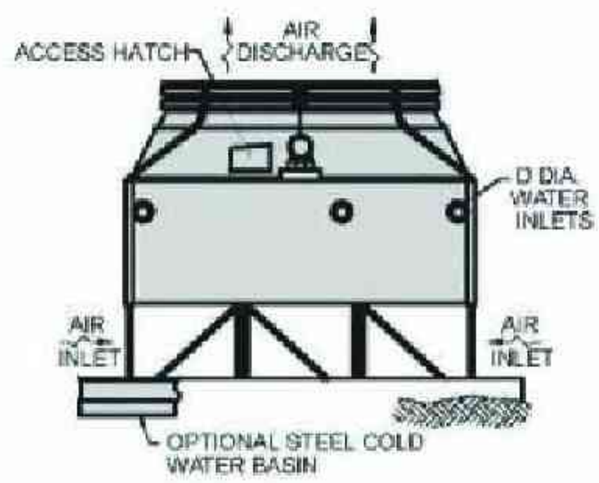

ELEVATION FACE A

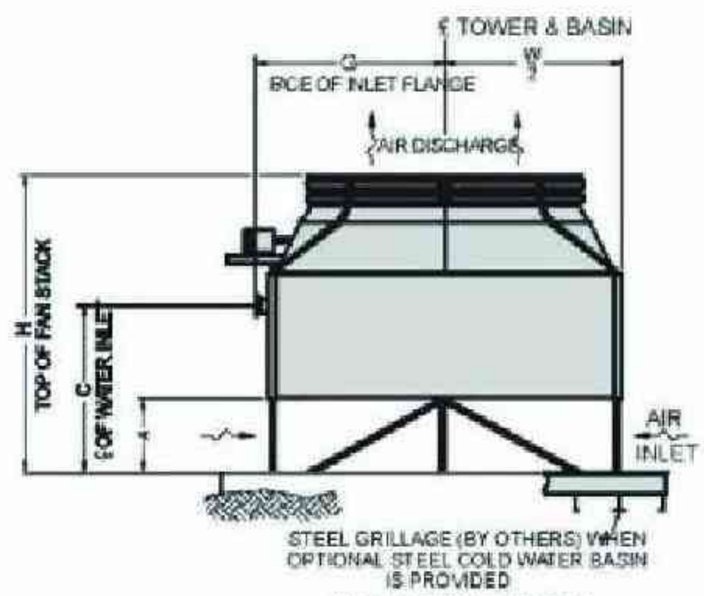

ELEVATION FACE B

One Cell Unit:

Model No.	Nominal Tons	HP	CFM	W	L	A	C	H	C 2	C 3	F	D	G
OIMT - 745	728	20	181000	19-11 1/2"	19-B 1/4"	5'	11-3 7/16"	20-0 15/16"	8-8 5/16"	N/A	16	10	10-9 15/16"
OIMT - 795	782	25	194000										
OIMT - 850	830	30	206000										
OIMT - 900	910	40	226000										
OIMT - 975	978	50	243000										
OIMT - 1050	1038	60	258000										
OIMT - 890	896	25	223000	23-10 3/4"	19-8 1/4"	6'	12-3 7/16"	21-0 15/16"	8-8 5/16"	N/A	16	12	12-9 9/16"
OIMT - 940	951	30	236000										
OIMT - 1025	1043	40	259000										
OIMT - 1100	1121	50	279000										
OIMT - 1175	1189	60	295000										
OIMT - 1250	1278	75	318000										
OIMT - 1065	1066	30	265000	23-10 3/4"	23-7 1/2"	6'	12-3 7/16"	21-0 15/16"	10-7 15/16"	2-9 7/16"	18	10	12-9 9/16"
OIMT - 1170	1170	40	291000										
OIMT - 1225	1258	50	312000										
OIMT - 1325	1334	60	331000										
OIMT - 1425	1434	75	356000										
OIMT - 1500	1557	100	387000										
OIMT - 1275	1287	40	32000	23-10 3/4"	27-6 3/4"	6' 6"	12-9 7/16"	21-6 15/16"	12-7 9/16"	2-9 7/16"	18	12	12-9 9/16"
OIMT - 1370	1384	50	344000										
OIMT - 1450	1468	60	365000										
OIMT - 1550	1578	75	392000										
OIMT - 1700	1714	100	426000										

Subject To Modification without notice

ISHRAI SATSA Member

Series 3000 Cooling Towers

Series 3000 Cooling Towers

- Proven total performance
- Low energy consumption
- Long service life
- Low installed cost
- Reliable year-round operation
- Easy maintenance
- Three-year warranty on mechanical equipment

Construction Details Heavy Duty Construction

- Heavy gauge steel frame
- Alternate materials of construction available

Low HP Axial Flow Fans

- Quiet operation
- Corrosion resistant aluminum
- Optional low sound fans available

FRP Casing Panels

- Corrosion resistant
- Maintenance free
- UV resistant finish

Wet Deck Surface with Integral Drift Eliminators

- Polyvinyl chloride (PVC)
- Impervious to rot decay or biological attack
- Elevated above the cold water basin for easy maintenance.

Oversized Access Door

- Inward swinging doors on each end wall with easy latch handles

Water Distribution System

- Sturdy steel covers in easy to remove sections
- Low pump head gravity distribution basing
- Large orifice non-clog nozzles

Single Cell Unit

MODEL NUMBER	NOMINAL TONS (1)	MOTOR HP	FAN CFM	WEIGHTS (lbs)			DIMENSIONS			
				OPER. (2)	SHPPING	HEAVIEST SECTION	L	W	H	A
3240A	240	10	62790	14770	6790	6790				
3272A	272	15	71340	14900	6920	6920	8-5 ¾"	18-0 ½"	9-3 5/8"	8-7 ¾"
3299A	299	20	78110	14960	6980	6980				
3333A	333	20	85720	15750	7260	7260				
3358A	358	25	91960	15780	7290	7290	8-5 ¾"	18-01 ½"	10-7 5/8"	9-11 ¾"
3379A	379	30	97400	15830	7340	7340				
3412A	412	25	103700	18580	8420	8420	9-9 ¼"	20-0 ½"	10-9 1/8"	9-11 ¾"
3436A	436	30	109830	18630	8470	8470				
3455A	455	25	112250	19480	8740	8740				
3482A	482	30	118880	19530	8790	8790	9-9 ¼"	20-0 ½"	12-1 1/8"	11-3 ¾"
3527A	527	40	130160	19690	8950	8950				
3473A	473	25	118870	23090	10190	10190	11-9 ¾"	21-6 ½"	10-10 1/8"	9-11 ¾"
3501A	501	30	125900	23140	10240	10240				
3552A	552	30	136170	25690	10800	10800				
3604A	604	40	149090	25850	10960	10960				
3648A	648	50	159950	25860	10970	10970	11-9 ¾"	21-6 ½"	12-2 1/8"	11-3 ¾"
3672A	672	60	166020	27060	12180	12180				
3728A	728	40	178860	32060	13770	8720				
3781A	781	50	191890	32070	13780	8730				
3828A	828	60	203230	32290	13990	8940	11-9 ¾"	21-6 ½"	16-4 7/8"	15-5 ½"
3872A	872	50	206630	35030	14500	8800				
3923A	923	60	218840	35250	14710	9010				
3970A	970	75	230080	36530	16000	10300	11-9 ¾"	21-6 ½"	19-0 7/8"	18-1 ½"
3985A	985	60	229950	40240	15560	9460				
31056A	1056	75	246700	40330	15650	9550				
3583A	583	25	143950	30300	12070	12070				
3618A	618	30	152460	30350	12120	12120	11-9 ¾"	21-6 ½"	21-8 7/8"	20-9 ½"
3676A	676	40	166920	30510	12280	12280				
3725A	725	50	179080	30520	12290	12290				
31132A	1132	75	267880	41290	16610	10230	13-11 1/8"	24-0 ½"	12-3 1/8"	11-3 ¾"
31213A	1213	75	282010	44300	17550	10720	13-11 1/8"	24-0 ½"	19-2 7/8"	18-1 ½"
31301A	1301	100	302580	46590	19840	13010	13-11 1/8"	24-0 ½"	21-10 7/8"	20-9 ½"

Subject To Modification without notice

Subject To Modification without notice

SPECIFICATIONS

SIZE						24	32	40	50	62	80	100	120	150	200	250	320	400	450
NOMINAL AIR FLOW					CFM	2400	3200	4000	5000	6250	8000	10000	12000	15000	20000	25000	32000	40000	45000
FACE AREA					FT	4.74	6.42	8.00	10.00	12.50	16.81	20.13	23.93	30.00	40.00	50.00	64.00	80.00	90.00
COILS	CW	80 °F DB / 67 °F WB	4R	WFR	US.GPM	13.52	19.6	25.30	27.68	34.66	46.20	58.74	73.18	92.56	152.70	163.60	211.20	266.92	269.00
				WPD	FT.WG	2.72	4.43	8.19	1.94	1.95	2.98	2.98	4.90	6.23	7.53	13.69	16.61	16.95	3.28
				COOLING CAP.	MBH	67.60	95.30	126.50	138.40	173.30	231.00	293.70	365.90	462.80	628.50	818.00	1056.00	1334.60	1345.00
			6R	WER	US.GPM	18.56	25.74	33.02	38.54	48.10	62.92	79.26	97.00	123.28	165.86	194.56	251.42	314.28	358.78
				WPD	FT.WG	6.51	10.11	17.99	4.66	4.66	6.91	6.78	10.87	13.97	16.64	9.84	11.76	11.76	16.53
				COOLING CAP.	MBH	92.80	128.70	165.10	192.70	240.90	314.60	396.30	485.00	616.40	829.30	972.80	1257.10	1571.40	1793.90
			8R	WFR	US.GPM	21.92	30.16	35.48	45.78	57.20	74.30	93.90	113.30	131.60	171.20	228.90	295.22	369.04	421.00
				WPD	FT.WG	10.99	16.88	4.53	7.85	7.85	11.55	11.33	17.87	3.35	3.99	7.30	8.68	8.68	11.92
				COOLING CAP.	MBH	109.60	150.80	177.40	228.90	286.00	371.50	468.00	566.50	658.00	886.00	1144.50	1476.10	1845.20	2105.00
		90 °F DB / 72 °F WB	4R	WFR	US.GPM	19.84	27.60	36.00	40.70	51.24	67.48	85.48	104.18	133.66	179.58	232.76	299.22	374.54	382.74
				WPD	FT.WG	5.55	8.63	15.73	3.99	4.04	6.25	6.00	9.46	12.32	14.59	26.77	30.58	31.66	6.35
				COOLING CAP.	MBH	99.20	138.00	180.00	203.50	256.20	337.40	427.40	520.90	668.30	897.90	1163.80	1496.10	1872.70	1913.70
			6R	WER	US.GPM	25.88	35.50	45.38	53.88	67.26	87.36	110.56	133.68	168.94	227.64	271.74	351.86	439.82	500.90
				WPD	FT.WG	11.98	18.23	32.16	8.67	8.64	12.66	12.53	19.60	24.91	29.73	18.06	21.80	21.80	30.52
				COOLING CAP.	MBH	129.40	177.50	226.90	269.40	336.30	436.80	522.80	668.40	844.70	1138.20	1358.70	1759.30	2199.10	2504.50
			8R	WFR	US.GPM	30.54	41.80	50.00	63.96	79.96	103.34	129.66	156.90	168.00	25.00	319.90	411.80	514.80	284.60
				WPD	FT.WG	20.12	30.55	8.17	14.50	14.50	21.12	20.85	32.37	6.35	7.53	13.52	16.00	16.01	21.76
				COOLING CAP.	MBH	152.70	209.00	250.00	319.80	399.80	516.70	648.30	784.50	930.00	1250.00	1599.50	2059.00	2574.00	2923.00
	DX	80 °F / 67 °F	4R	COOLING CAP.	MBH	71.10	96.30	120.00	150.00	187.50	237.10	301.90	358.90	449.90	599.90	749.90	959.90	1199.90	1349.80
			6R	COOLING CAP.	MBH	86.10	116.70	145.40	181.70	227.20	287.30	365.80	434.90	545.20	726.90	908.70	1163.10	1453.90	1635.60
			8R	COOLING CAP.	MBH	92.90	125.80	156.80	196.00	245.00	309.90	394.60	469.10	588.00	784.10	980.10	1254.50	1568.10	1764.10
		90 °F / 72 °F	4R	COOLING CAP.	MBH	90.60	122.80	153.00	191.20	239.00	302.30	384.90	457.50	573.60	764.80	956.00	1223.70	1529.60	1720.80
			6R	COOLING CAP.	MBH	109.80	148.70	185.30	231.70	289.60	366.30	466.40	554.40	695.00	926.70	1158.40	1482.70	1853.40	2085.10
			8R	COOLING CAP.	MBH	118.40	160.40	199.90	249.90	312.40	395.10	503.00	598.00	749.70	999.50	1249.40	1599.30	1999.10	2249.00
	HW	70 °F DB AET	1R	WFR	US.GPM	6.12	8.30	10.64	13.60	17.00	21.50	27.40	32.54	40.80	54.40	68.00	87.04	108.80	122.40
				WPD	FT.WG	3.10	6.70	12.30	3.20	3.20	4.00	4.70	7.40	9.40	11.40	2.90	3.40	3.40	4.70
				HEATING CAP.	MBH	61.20	83.00	106.40	136.00	170.00	215.00	247.00	325.40	408.00	544.00	680.00	870.40	1088.00	1224.00
			2R	WFR	US.GPM	11.57	15.66	19.52	24.40	30.50	35.58	49.90	59.35	74.40	99.20	124.00	158.72	198.40	223.20
				WPD	FT.WG	2.80	6.10	8.90	2.60	2.60	3.80	4.00	6.30	8.00	8.90	2.30	2.90	2.90	4.0
				HEATING CAP.	MBH	115.70	156.60	195.20	244.00	305.00	385.80	466.10	593.50	744.00	992.00	1240.00	1587.20	1984.00	2232.00
	STM	70 °F	1R	HEATING CAP.	MBH	106.20	143.80	179.20	224.00	280.00	354.10	450.90	536.00	672.00	896.00	1120.00	1433.60	1792.00	2016.00
			2R	HEATING CAP.	MBH	191.50	259.40	323.20	404.00	505.00	638.70	813.25	966.80	1212.00	1616.00	2020.00	2585.60	3232.00	3636.00

CW-COIL CAPACITY AT NOM. CFM, 8 FPI, EWT = 45 °F " DX-COIL CAPACITY AT NOM. CFM, 8 FPI, ET = 45 °F" HW-COIL CAPACITY ATONOM . CFM, 8 FPI, EWT/ LWT =180/160 °F" *MBH = 1000 BTUH" STM-COIL CAPACITY AT NOM. CFM, 8 FPI, 2 PSIG STEAM PRESSURE "WPD-WTR PRESS DROP" WFR-WTR FLOW RATE

AET-AIR ENTERING TEMP.

MBH=1000 BTUH

OMRAN TAHVIEH

Omran Tahvieh Industrial Co.
Heating , Ventilation And Air Conditioning

ISHRAI SATSA Member

Air Handling Unit

COMPONENTS DESCRIPTION

OM - AH Serie Units Sections are available with various accessories in order to provide maximum compliance to most complex specification.

The following accessories are listed and described :

ABS - Common base frame

acting as the skid collecting all section within specified arrangement. ABS is equipped with lifting lugs to enable easy handling of the unit during transportation and installation.

Attached - Top cover as

weather proofing component of outdoor unit .ATC is made with slight pitch down from the center line finishing with channel gutters on either sides to avoid rain water splash at side of the unit.

ASM - Spring mounts

for Fan floating base instead of standing rubber mounts for precisely specified anti vibration protection requirement. ASM selection of different static deflections is available at request.

AIL - Air intake louver

for application on outdoor units or industrial units with free return. Ail are of standard fixed design with bird screen in from of wire mesh and sized according to selected air intake damper (DAI)for 100 % (full), 50 % and 25 % air flow.

ASL - Air intake sand louver for

coarse sand extraction prior the entry in the unit as considerable help in pre - filtration process in areas where sandstorms are frequent.

ARH - Rain Hood

for air intake of outdoor unit. ARH is completely projected over air Intel opening and equipped with bird screen in from of wire mesh. The use of ARH is protecting the unit from rain drops penetration through air intake regardless of rainstorm intensity and direction.

ABD - BY - pass duct

as obligatory accessory to Face and Bypass control damper. ABD is providing accessory alternative air passage around the coil.

ABD is provided with perforated

restructure, when required, for air flow balance, as the same is Essential for proper functioning of Bypass control.

AFC - Flexible duct connector, to

be used if required by specification for complete anti - vibration disconnect from dusting system .AFC is available for all types of fans' outlets as well as for all other connections. This accessory is not required with This type of unit as all vibration is held at floating fan base but some specification are asking for the same for more protection.

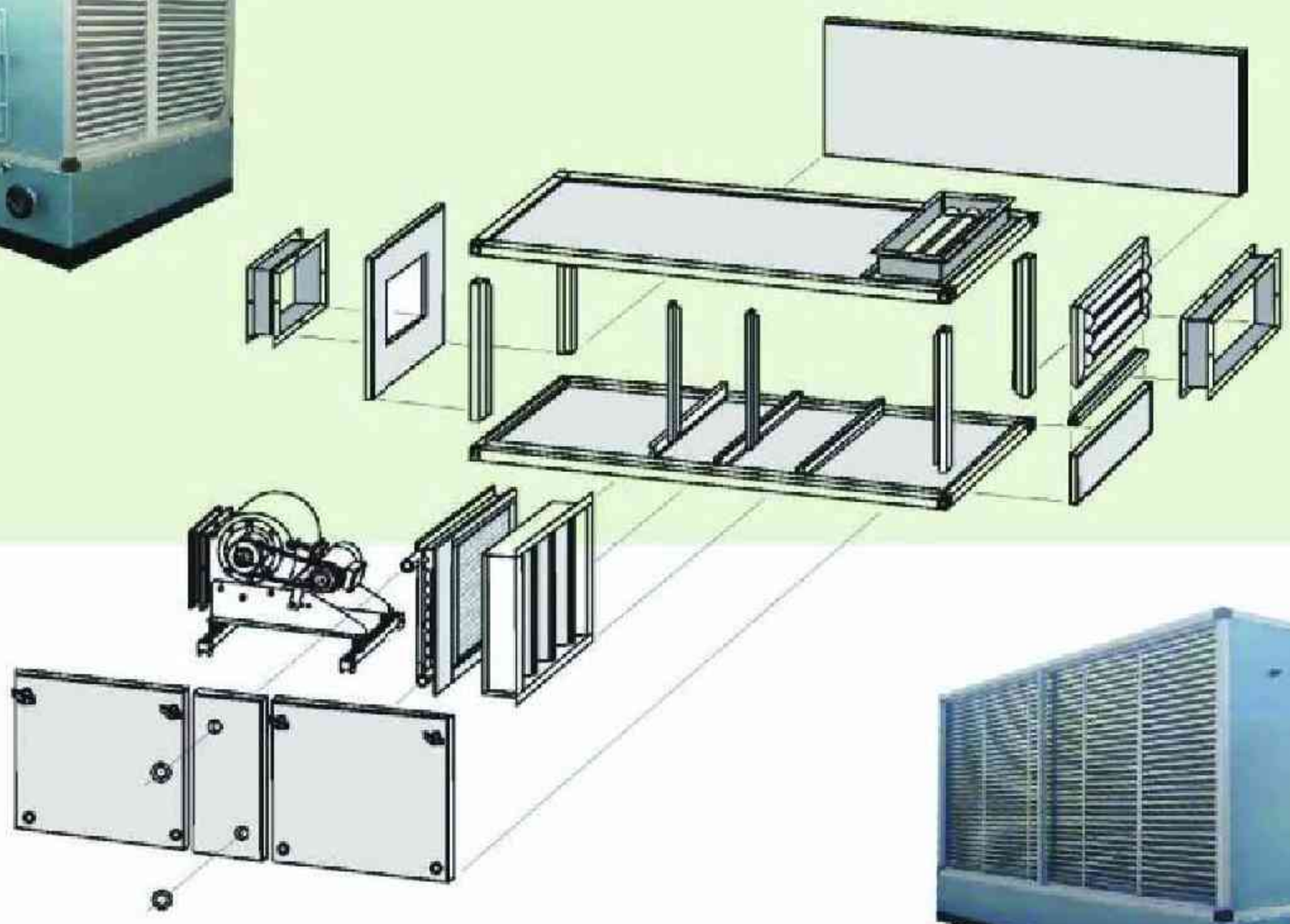

Subject To Modification without notice

Omran Tahvieh Industrial Co.

Heating , Ventilation And Air Conditioning

OTC Series (400-1600 TR)

CROSS FLOW TOP DISCHARGE (TRAPEZOIDAL) HDGS BASIN COOLING TOWERS

GENERAL SPECIFICATION

STRUCTURE: The structure is designed to withstand wind load of 30 psf . Trapezoidal cooling towers consists of modular bolted subassemblies cross - braced with tension rods.

CASING: Casing of galvanized steel sheets give full protection against corrosion , corrugated asbestos cement board casing is applied with vertical corrugations is another alternate for trapezoidal cooling towers .Corrugated casing joints are lapped .

BASINS: Heavy gauge galvanized steel sheets or concrete are used to fabricate basins. Tower basins are completed with make up water float control valve as well as over flow, drain and suction fitting.

FILLING: Preservative - treated Russian or Finn timber are used. Design assures permanent fill alignment and configuration.

WATER DISTRIBUTION

Gravity water distribution system for uniform distribution of hot water over the entire fill area IS considered , using flange and collector.

FAN: Low speed, noiseless, multi -blade pressed galvanized steel or aluminum induced- draft propeller fans are standard equipment on some OMRAN TAHVIEH cross flow cooling towers. Fans are designed to grantee adequate air flow between suction and discharge ports for the provision of maximum heat transfer and tower performance requirements.

DRIVE: Cubic cooling tower fans are belt drive or geareducer drive as well as belt drive. Option of double speed fan for belt drive cooling towers on request is possible.

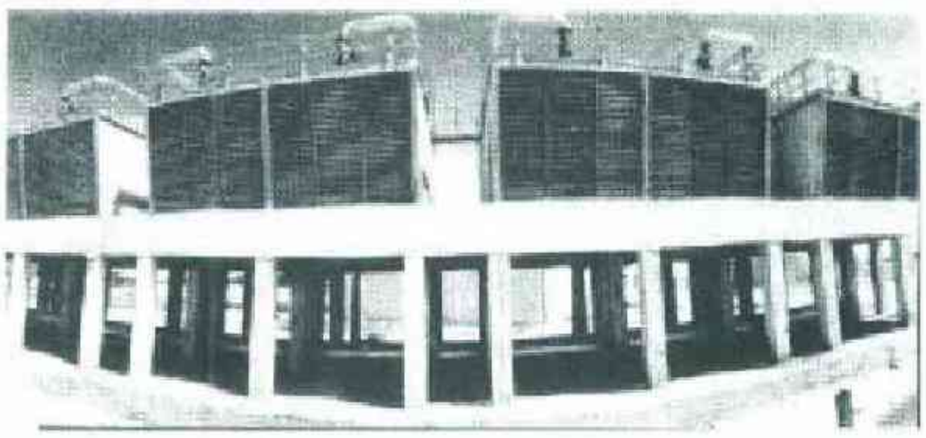

CONCRETE BASIN COOLING TOWER

TABLE: 1

OMRAN TAHVIEH Trapeziodal Cooling Tower Approximate Dimensional Data:

MODEL	TONS NOMINAL	LENGHT		WIDTH	HIGHT		FAN NO.x DIA	MOTOR	PIPING CONNECTIONS					APPROXIMATE WEIGHT x10 3 Kg	
		AT FAN DECK LEVEL	AT BASIN LEVEL		BODY	TOTAL			INLET	OUTLET	OVER FLOW	MAKE UP	DRAIN	SHIPPING	OPERATING
	TR	L	l	W	h	H	f	HP							
OTC 400 - 1	400	6500	5500	2500	2350	3400	1 × 2050	10	2 × 5"	8"	1 ½"	1"	3"	4.5	10
OTC 500 -1	500	6500	5500	2850	2550	3600	1 × 2200	15	2 × 5"	8"	1 ½"	1"	3"	5.2	12
OTC 600 - 1	600	6800	5800	2850	2950	4000	1 × 2200	20	2 × 6"	10"	2"	1 ½"	4"	5.9	13
OTC 700 - 1	700	6800	5800	2850	3350	4400	1 × 2200	20	2 × 6"	10"	2"	1 ½"	4"	6.3	14.2
OTC 800 - 1	800	7000	6000	3000	3450	4500	1 × 2300	20	2 × 6"	10"	2"	1 ½"	4"	7.1	15.5
OTC 1000 - 2	1000	6500	5500	5700	2550	3600	2 × 2200	2 × 15	4 × 5"	12"	2"	2"	5"	10.4	24
OTC 1200 - 2	1200	6800	5800	5700	2950	4000	2 × 2200	2 × 20	4 × 6"	14"	2"	2"	5"	11.8	26
OTC 1400 - 2	1400	6800	5800	5700	3350	4400	2 × 2200	2 × 20	4 × 6"	14"	2"	2"	5"	12.6	28.4
OTC 1600 - 2	1600	7000	6000	6000	3450	4500	2 × 2300	2 × 20	4 × 6"	14"	2"	2"	5"	14.2	31

All dimensions are in mm

Subject To Modification without notice

ISHRAI SATSA Member

OMB F.R.P Cooling Tower

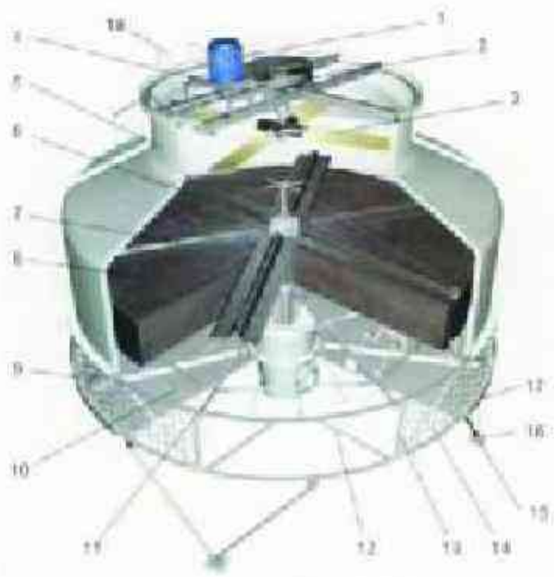

CLOSED TYPE

OPENED TYPE

1. Motor (TEFC)
2. V-Belt Reducer
3. Fan
4. Motor Support
5. Fan Stack (FRP)
6. Sprinkler Head
7. Sprinkler System
8. In-fill
9. Frame
10. Infill Mesh
11. Infill Support
12. Air Inlet Slant Post
13. Air Inlet Post
14. Air Inlet Mesh
15. Tower Stand Support
16. Tower Support Plate
17. Basin(FRP)
18. Ladder

2.1 Principle of operation

The automatic rotating sprinkler system distributes the hot water evenly over the entire fill section. Dry air is simultaneously drafted upward causing evaporation and so, the heat is removed. The cooled water falls into the basin and is pumped to the heat source for recirculation.

2.2 Thermal design

The "Omran" cooling towers operate on the counter flow principle which gives the best performances. The air flow through the tower in fill is opposed to the water flow.

2.3 Better Air Flow

The rotating water sprinkler head distributes the hot water within forming a fine spray, and hence does not need the conventional type of moisture eliminator. This is because the water header has large number of holes giving a 'steam' type flow direct into the infill. Towers with fixed nozzles cannot obtain the coverage, which is needed for optimum cooling. We should not overlook that in rectangular type towers, eliminators provide a pressure drop which evens out the flow particularity into the Corner.

2.4 Pumping head

As seen already, the water distribution by a rotating header, is a significant part of the "Omran" tower design. The large diameter holes in the rotating header give a gentle stream of water at negligible pressure loss. Also, there is no risk of 'clogging', as can easily happen with spray nozzles in other types of towers. The "Omran"cooling towers pumping head, is the static height of the spray or header pipe above the water level in the basin, plus the pressure loss through the Rotating header, sprays of balancing valves, according to the type of tower being Considered.

2.5 Life Factor

Although we generally refer to the towers as being constructed of fiberglass, we should actually refer to them as being FRP (Fiberglass Reinforced Plastic) FRP should not be confused with the translucent fiberglass roofing panels, and in particular with the cheaper grades which have given poor results even only in a few years.

2.6 Smaller Fan Motors

The lower H.P rating of the motor used in "Omran" towers therefore leads to a substantial saving in annual energy cost.

Model	Motor Power	Fan Dia.	Dimension		Connections					
			Hight	Dia.	Inlet	Outlet	Over Flow	Drain	Make Up	Quick Fill
OMB-8	0.5	0.8	-	1.2	-	-	-	-	-	-
OMB-10	0.5	0.8	-	1.2	-	-	-	-	-	-
OMB-15	0.5	0.8	-	1.2	-	-	-	-	-	-
OMB-20	0.5	0.8	-	1.5	-	-	-	-	-	-
OMB-25	0.5	0.8	-	1.5	-	-	-	-	-	-
OMB-30	1	0.83	-	1.78	-	-	-	-	-	-
OMB-40	1	0.83	2	1.78	3	3	1	1	½	-
OMB-50	1.5	1.17	2.48	2.1	3	3	1	1	¾	-
OMB-60	2	1.17	2.48	2.1	4	4	1 ½	1 ½	¾	-
OMB-80	2	1.17	2.48	2.1	4	4	1 ½	1 ½	¾	-
OMB-90	2	1.2	2.35	2.59	4	4	1 ½	1 ½	¾	-
OMB-100	3	1.2	2.57	2.59	4	4	1 ½	1 ½	¾	-
OMB-125	4	1.45	2.62	2.95	5	5	1 ½	1 ½	¾	¾
OMB-150	5.5	1.45	2.62	2.95	5	5	1 ½	1 ½	¾	¾
OMB-175	5.5	1.65	2.92	3.71	6	6	1 ½	1 ½	¾	¾
OMB-200	5.5	1.65	2.92	3.71	6	6	1 ½	1 ½	1	1
OMB-225	7.5	1.65	3.66	4.39	6	6	1 ½	1 ½	1	1
OMB-250	7.5	1.7	3.66	4.39	6	6	1 ½	1 ½	1	1
OMB-300	7.5	1.7	3.66	4.39	8	8	3	1 ½	1	1
OMB-350	10	2.27	3.68	4.85	8	8	3	1 ½	1	1
OMB-400	15	2.27	3.68	4.85	8	8	3	1 ½	1	1
OMB-450	15	2.95	4.04	5.51	10	10	4	3	2	2
OMB-500	15	2.95	4.27	5.51	10	10	4	3	2	2
OMB-600	15	3.2	4.83	6.53	10	10	4	3	2	2
OMB-700	20	3.2	4.83	6.53	10	10	4	3	2	2
OMB-800	25	3.5	4.83	7.59	12	12	4	3	3	3
OMB-1000	30	3.5	5.23	7.59	12	12	4	3	3	3
OMB-1250	30	3.5	5.56	8.79	12	12	4	3	3	3

Subject To Modification without notice

OFCC Cooling Towers

GENERAL SPECIFICATIONS OF COUNTER FLOW HDGS COOLING TOWERS

OMRAN TAHVIEH COUNTER FLOW COOLING TOWERS FURNISH AND INSTALL, AS SHOWN ON THE PLAN DRAWINGS.

CASING: The casing of galvanized steel sheets gives full protection against corrosion.

BASINS: Heavy gauge galvanized steel sheets are used to fabricate basins. Tower basins are completed with make up water float control valve as well as over flow, drain and suction fitting.

WATER DISTRIBUTION: Water shall be distributed evenly over the tower fill area by a water distribution system consisting of galvanized steel header and spray nozzles.

FILLING: Fill elements shall be made of PVC or ABS materials. Fill elements shall have sufficient contact area for removal of heat.

FAN: Statically and dynamically balanced forward curved centrifugal fans with a rigid housing shall be used on all counter flow OMRAN TAHVIEH cooling towers.

DRIVE: OFCC cooling towers fans are belt driven.

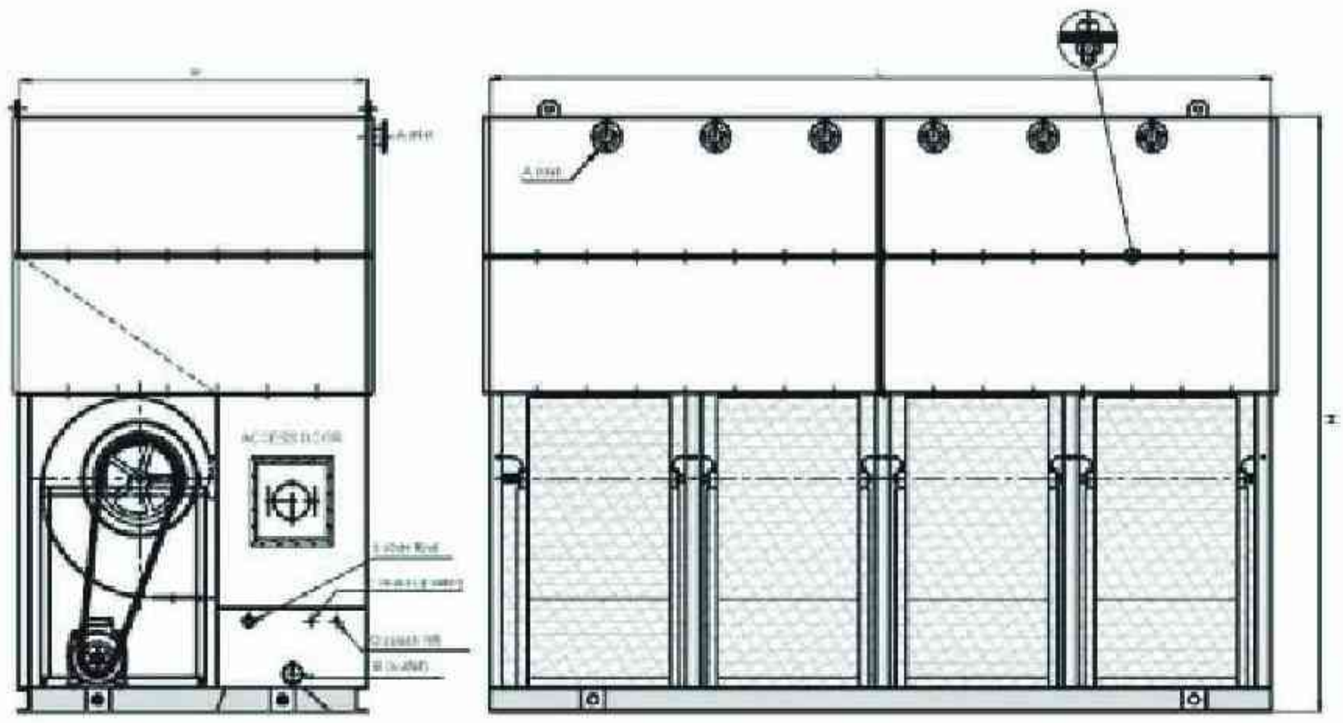

Model No.	NOMINAL TONS	GPM NOMINAL	MOTOR (QNT.) × HP	BLOWER		WEIGHT (kg)	
				QNT.	DIA.	NET	OPER.
1 OFCC 10	10	30	1 × 3/4	1	15 "	310	360
1 OFCC 15	15	45	1 × 1	1	15 "	320	370
1 OFCC 20	20	60	1 × 1 ½	1	15 "	400	480
1 OFCC 25	25	75	1 × 2	1	18 "	480	500
1 OFCC 30	30	90	1 × 3	1	18 "	470	620
1 OFCC 35	35	105	1 × 3	1	22 "	600	800
1 OFCC 40	40	120	1 × 3	1	22 "	700	1000
1 OFCC 50	50	150	1 × 3	1	22 "	800	1050
1 OFCC 60	60	180	1 × 4	1	22 "	900	1200
1 OFCC 75	75	225	1 × 5.5	1	22 "	1050	1500
1 OFCC 90	90	270	1 × 7.5	1	22 "	1400	1950
1 OFCC 105	105	315	1 × 7.5	2	22 "	1700	2300
1 OFCC 120	120	360	1 × 10	2	22 "	1800	2400
1 OFCC 140	140	420	1 × 15	2	22 "	1900	2600
1 OFCC 160	150	480	1 × 10 + 1 × 5.5	3	22 "	2700	3600
1 OFCC 180	180	540	1 × 10 + 1 × 5.5	3	22 "	2800	3850
1 OFCC 200	200	600	1 × 10 + 1 × 5.5	3	22 "	3000	4300
1 OFCC 250	250	750	2 × 10	4	22 "	3500	5000
1 OFCC 300	300	900	2 × 10 + 1 × 5.5	5	22 "	4200	6000
1 OFCC 350	350	1050	3 × 10	6	22 "	5000	7000
1 OFCC 400	400	1200	3 × 10	6	22 "	5400	7500
1 OFCC 450	450	1350	3 × 10 + 1 × 5.5	7	22 "	6000	8500
2 OFCC 500	500	1500	4 × 10	8	22 "	7000	9500
2 OFCC 600	600	1800	4 × 10 + 2 × 5.5	10	22 "	8500	11500
2 OFCC 700	700	2100	6 × 10	12	22 "	10000	13500
2 OFCC 800	800	2400	6 × 10	12	22 "	11500	16000
2 OFCC 900	900	2700	6 × 10 + 2 × 5.5	14	22 "	13000	18000
2 OFCC 1000	1000	3000	8 × 10	16	22 "	13200	18500
2 OFCC 1200	1200	3600	10 × 10	20	22 "	16000	22000

Subject To Modification without notice

ISHRAI SATSA Member

OFCB Series (10 - 1200 TR)

GENERAL SPECIFICATIONS OF COUNTER FLOW HDGS COOLING TOWERS

OMRAN TAHVIEH COUNTER FLOW COOLING TOWERS FURNISH AND INSTALL, AS SHOWN ON THE PLAN DRAWINGS.

CASING: The casing of galvanized steel sheets gives full protection against corrosion.

BASINS: Heavy gauge galvanized steel sheets are used to fabricate basins. Tower basins are completed with make up water float control valve as well as over flow, drain and suction fitting.

WATER DISTRIBUTION: Water shall be distributed evenly over the tower fill area by a water distribution system consisting of galvanized steel header and spray nozzles.

FILLING: Fill elements shall be made of PVC or ABS materials. Fill elements shall have sufficient contact area for removal of heat.

FAN: Statically and dynamically balanced forward curved centrifugal fans with a rigid housing shall be used on all counter flow OMRAN TAHVIEH cooling towers.

DRIVE: OFCB cooling towers fans are belt driven.

Model No.	NOMINAL RATING		DIMENSIONS (mm)			BLOWERS		MOTOR		AIRFLOW	PD	WEIGHT (kg)	
	TONS	GPM	L	W	H	NO.	Size (in)	NO.	hp.	CFM	ft	SHIPPING	OPER.
OFCB 10 - 1	10	30	500	950	2000	1	15	1	3/4	2800	22	270	380
OFCB 15 - 1	15	45	720	950	2000	1	15	1	1.5	4200	22	320	480
OFCB 20 - 1	20	60	1000	950	2000	1	18	1	2	5400	22	380	580
OFCB 25 - 1	25	75	1000	1250	2000	1	20	1	3	7000	22	460	720
OFCB 30 - 1	30	90	1000	1450	2000	1	22	1	3	8400	22	570	860
OFCB 35 - 1	35	105	1000	1750	2000	1	22	1	4	9800	22	640	990
OFCB 40 - 1	40	120	1000	1950	2000	1	22	1	5.5	11300	22	690	1080
OFCB 50 - 1	50	150	1200	1950	2000	1	22	1	7.5	14000	22	800	1300
OFCB 60 - 1	60	180	1450	1950	2750	1	22	1	7.5	17000	23	980	1750
OFCB 75 - 2	75	225	1750	1950	2750	2	22	1	10	21000	23	1400	2500
OFCB 90 - 2	90	270	1950	1950	2750	2	22	1	10	23500	23	1450	2600
OFCB 105-2	105	318	2400	1950	2750	2	22	1	10	28000	23	1600	3000
OFCB 120-3	120	360	2900	1950	2750	3	22	2	1 × 10 1 × 5.5	34000	23	2050	3800
OFCB 140 - 3	140	420	3350	1950	2750	3	22	2	1 × 10 1 × 5.5	39000	23	2300	4200
OFCB 160 - 4	160	480	3900	1950	2750	4	22	2	10	45000	23	2900	5100
OFCB 180 - 4	180	540	4200	1950	2750	4	22	2	10	48500	23	3000	5400
OFCB 220-5	220	660	4900	1950	2750	5	22	3	2 × 10 1 × 5.5	55000	23	3500	6300
OFCB 260 - 6	260	780	5800	1950	2750	6	22	3	3 × 10	66000	23	4100	7400
OFCB 300-7	300	900	6800	1950	2750	7	22	4	3 × 10 1 × 5.5	78000	23	4800	8700
OFCB 340 - 8	340	1020	7800	1950	2750	8	22	4	4 × 10	89000	23	5400	9900
OFCB 340 - 8	340	1020	3900	3800	2750	8	22	4	4 × 10	89000	23	5300	9700
OFCB 400-10	400	1200	4900	3800	2750	10	22	6	4 × 10 2 × 5.5	110000	23	6300	11800
OFCB 450 - 12	450	1350	5700	3800	2750	12	22	6	6 × 10	128000	23	7800	14100
OFCB 500 - 12	500	1500	5850	3800	2750	12	22	6	6 × 10	132000	23	7900	14400
OFCB 530 - 14	530	1740	6800	3800	2750	14	22	8	6 × 10 6 × 5.5	152800	23	9000	16600
OFCB 660 - 16	660	1990	7800	3800	2750	16	22	8	8 × 10	175000	23	10400	19100
OFCB 740-18	740	2220	8750	3800	2750	18	22	10	8 × 10 2 × 5.5	196500	23	11600	21400
OFCB 820 - 20	820	2460	9790	3800	2750	20	22	10	10 × 10	219000	23	12900	23800
OFCB 900 - 20	900	2700	10700	3800	2750	22	22	12	10 × 10 2 × 5.5	240000	23	14000	25900
OFCB 980 - 24	980	2940	11650	3800	2750	24	22	12	12 × 10	262000	23	15200	28200
OFCB 1050 - 26	1050	3130	12650	3800	2750	26	22	14	12 × 10 2 × 5.5	284000	23	16500	30500
OFCB 1140 - 28	1140	3420	13690	3800	2750	28	22	14	14 × 10	305600	23	17600	32700

Subject To Modification without notice

Omran Tahvieh Industrial Co.

Heating , Ventilation And Air Conditioning

OSGF Series Cooling Towers

F Series Fiberglass Composite Cooling Tower

Durable OMRAN Gearbox
the industry quality. 3 year warranty assures trouble-free operation.

Non-skid Fan Deck
of interlocking pultruded panels, with fasteners concealed bu the adjacent panel, offers a clean surface free of trip hazards.

Corrosion Resistant
pultruded fiberglass structural components and fan deck panels, FRP end wall casing and stainless steel hot water basins are all impervious to a broad range of corrosive materials.

Simple Maintenance
Each Gearbox is equipped with a stainless steel lubrication line terminating outside the fan cylinder, near the motor , at an oil level sight glass and drain. Low profile allows for easier access to equipment .

High-Performance Film Fill
OMRAN film fill removes process heat efficiently, predictably. Integrally molded drift eliminators and louvers virtually eliminate drift spotting nuisance and help operation even in extremely cold weather .

Internal Piping Arrangement
enhances tower appearance and allows balanced distribution and flow.

OMRAN Spiral Target Nozzles
Injection molded polypropylene with a diffuser and snap-in orifice cap offer a wide range of adjustment in flow rates and basin water levels; even distribution over the fill area.

Tower Schematic

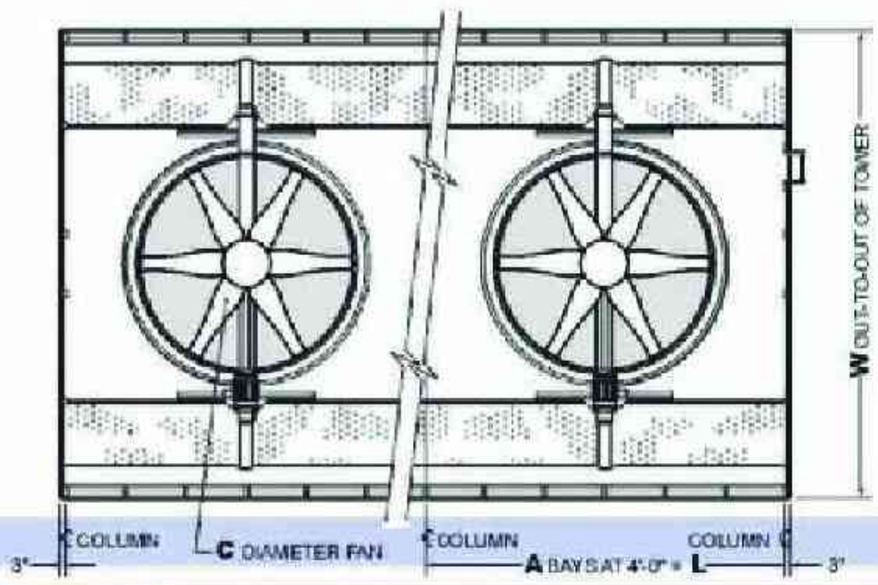

Tower Plan

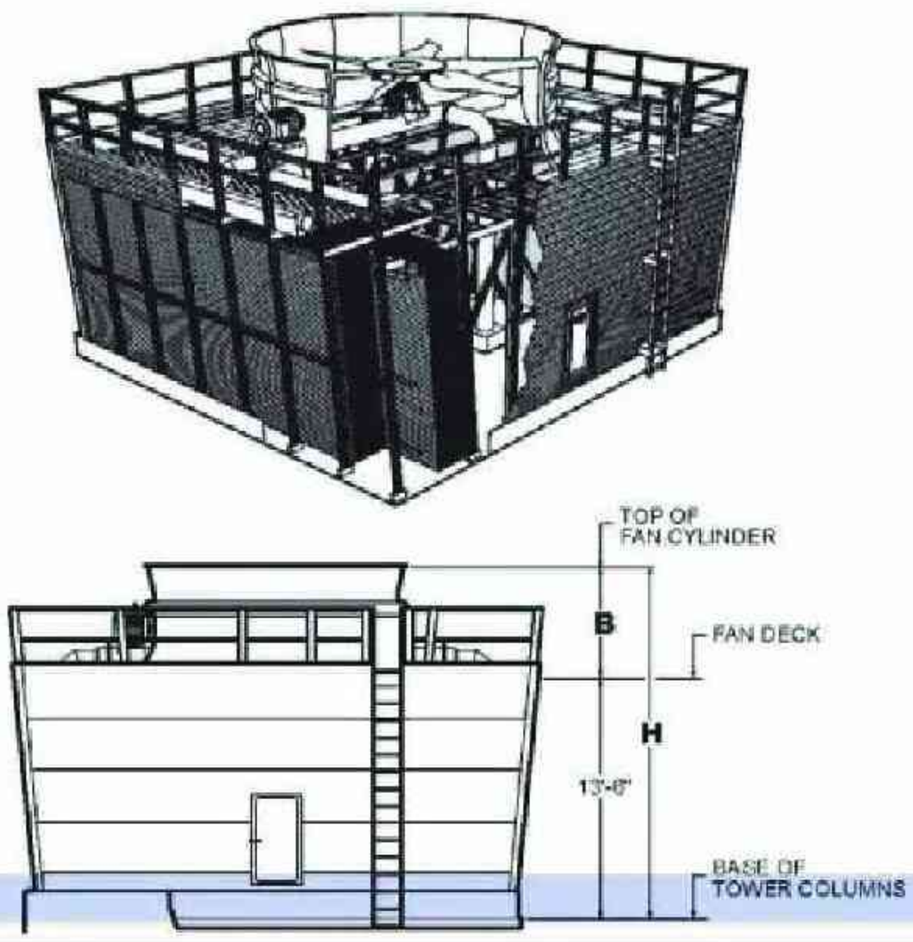

Endwall Elevation

Subject To Modification without notice

Tower Model	Dimensions					
	W	L	H	A	B	C
OSGF 1211	29' - 2"	16' - 0"	19' - 6"	4	6' - 0"	144"
OSGF 1221	31' - 2"	16' - 0"	20' - 6"	4	7' - 0"	168"
OSGF 1231	31' - 2"	20' - 0"	20' - 6"	5	7' - 0"	168"
OSGF 1241	31' - 2"	24' - 0"	20' - 6"	6	7' - 0"	168"
OSGF 1251	35' - 2"	24' - 0"	20' - 6"	6	7' - 0"	216"
OSGF 1261	35' - 2"	28' - 0"	20' - 6"	7	7' - 0"	216"

ISHRAI SATSA Member

Series V Closed Circuit Cooling Tower

Closed Loop cooling system provide many operational and maintenance benefits to the end user:

- Maximize System Efficiency
- Minimize System Fouling
- Lower System Maintenance Costs
- Reduce System Energy Cost with free Cooling
- Eliminate Plume and Water Costs with Dry Operation

The Omran Closed Circuit Cooling Tower Provide efficient operation for closed loop cooling applications to meet the demands of today's air conditioning, equipment cooling, and industrial process cooling system. Omran Closed Circuit Cooling Tower are selected for numerous commercial and industrial process cooling applications.

- Water source heat pumps
- Self-contained units
- Chillers
- Free cooling
- Optimized evaporative and dry cooling in a single unit.
- Special fluids
- Compressor cooling
- Machine jacket cooling
- Induction furnaces
- Multiple independent loads in a single unit.

Principle of Operation

The Omran Series V Closed Circuit Cooling Tower combines the functions of an open cooling tower and heat exchanger by replacing the wet deck surface with a coil type heat exchanger.

The liquid to be cooled is circulated through a continuous serpentine coil, which is continually wetted on the outside by a recirculating water system. Air is simultaneously blown upward over the coil, causing a small portion of the recirculated water to evaporate. This evaporation removes heat from the coil, cooling the liquid in the coil.

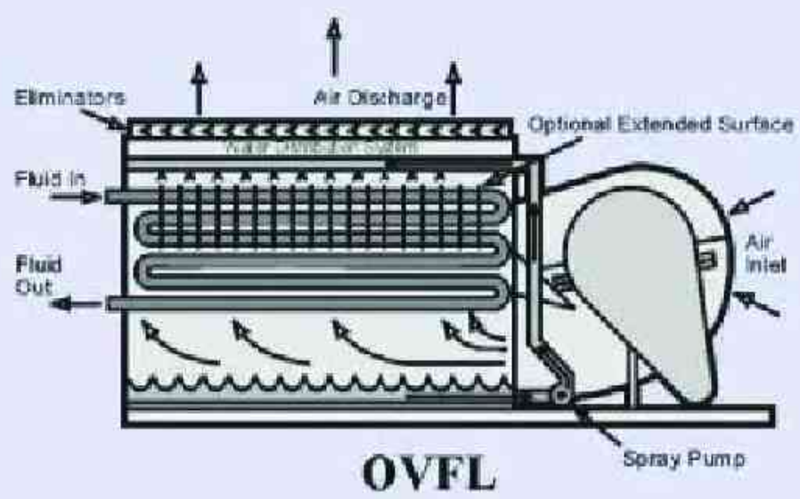

OVFL

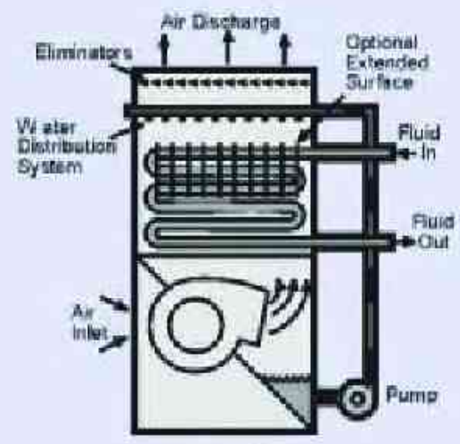

OVF1

Model No.	Weight		CFM	Fan Motor (hp)	Pump Motor (hp)	Spray Pump (gpm)	Connections		L	W	H
	Approx Shpg. (lb)	Approx Oper (lb)					Size (in)	F			
OVF 1-009-12 G	1,625	1,875	5,690	3	1/3	35	3	1'-10 3/4"	3' -0"	3' -111/2"	7' -3 3/4"
OVF 1-009-22 G	1,785	2,075	5,590	3		35		2' -73/4"			8' -1/4"
OVF 1-009-32 G	1,965	2,295	5,520	3		35		3' -3 3/4"			8' -8 3/4"
OVF 1-009-42 G	2,125	2,495	5,470	3		35		3' -11 3/4"			9' - 43/4"
OVF 1-018-02 H	2,175	2,635	11,180	5	1/2	75	4	1' - 1/4"	6'-0"	3' -111/2"	6' 71/4"
OVF 1-018-12 H	2,415	2,955	10,930	5		75		1'- 9 3/4"			7' - 33/4"
OVF 1-018-22 J	2,640	3,260	12,310	7.5		75		2'-61/4"			8' -1/4"
OVF 1-018-32 J	2,940	3,660	12,150	7.5		75		3' -2 3/4"			8' -83/4"
OVF 1-018-42 J	3,190	4,010	12,030	7.5		75		3' -11 1/4"			9' -51/4"
OVF 1-027-22 H	3,830	4,940	14,060	5	3/4	115	4	2'	8'-113/4"	3' -111/2"	7' -6"
OVF 1-027-22 J	3,750	4,860	16,090	7 ½		115		2' -91/4"			8' -31/4"
OVF 1-027-32 K	4,108	5,440	17,490	10		115		3 -61/2"			9' -1/2"
OVF 1-027-42 K	4,570	5,970	17,310	10		115		4' -3 3/4"			9' -93/4"
OVF 1-036-21 L	4,760	6,280	24,870	15	1	150	4	2' -9 1/4"	12'-0"	3' -111/2"	8' -31/4"
OVF 1-036-31 L	5,310	7,020	24,560	15		150		3' - 61/2"			9' -1/2"
OVF 1-036-41 L	5,810	7,710	24,310	15		150		4' -3 3/4"			9' -93/4"
OVF 1-036-51 L	6,310	8,390	24,100	15		150		5' -1"			10 -7"
OVF 1-048-21 M	7,870	10,230	35,790	20	1 1/2	220	4	2'-9 1/4"	11' -11 1/2"	4' -85/8"	9' 11 5/8"
OVF 1-048-31 N	8,460	11,390	38,070	25		220		3' -6 1/2"			10 -87/8"
OVF 1-048-41 N	9,320	12,690	37,690	25		220		4' 3 3/4"			11' -61/8"
OVF 1-072-210	10,720	15,670	52,650	30	2	305	4	2'-9 1/4"	11-73/4"	7' -103/8"	11' -37/8"
OVF 1-072-310	12,050	17,380	51,990	30		305		3' -61/2"			12' -11/8"
OVF 1-072-410	12,480	18,000	51,460	30		305		4' -3 3/4"			12' -103/8"

* Unit ships in one piece .

Subject To Modification without notice

OMRAN TAHVIEH

Omran Tahvieh Industrial Co.

Heating , Ventilation And Air Conditioning

Series O10 - Series O15

CROSS FLOW COOLING TOWERS

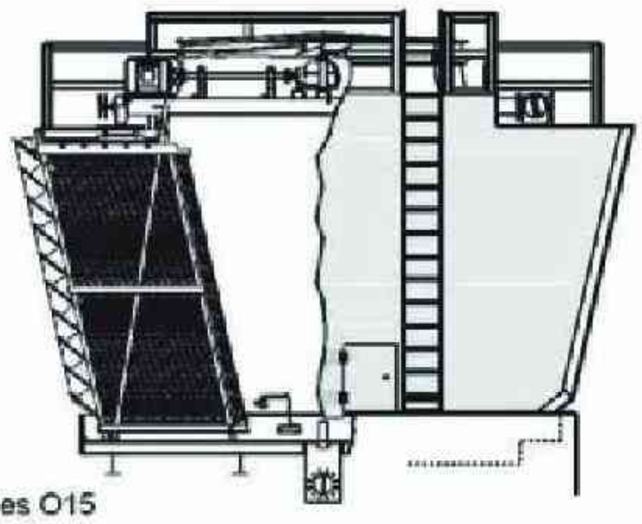

Series O15

The Quality Advantage

- Lower operating costs. Adjustable pitch fans with true airfoil blades and 98% efficient Geareducer drive assure maximum utilization of applied fan power. Computer optimized fill configuration and low pressure - drop drift eliminators afford maximum cooling with minimum power input. Gravity flow water distribution minimizes pump power requirements.

- Lower maintenance costs. Heavy - duty aluminum alloy fans, cast-iron Geareducers, and stainless steel drive shafts require only periodic maintenance. Low - maintenance materials are used throughout the cooling tower. Wide spaced splash - fill helps prevent clogging. The fill area is readily accessible for cleaning.

- Two - year drive train warranty.

- Single - source parts availability. All tower components except the electric motors are manufactured, guaranteed, and stocked by Omran.

- Flexible Cooling Capacity. Twenty - four tower models with capacities to 6720 GPM per fan cell, provide the flexibility to fit almost any job. Greater capacity is available with multiple fan-cells.

- Proven Performance. Omran stands by its responsibility for reliable thermal performance. We guarantee it!

- Extremely Low Drift. Drift eliminators really get rid of costly nuisance of drift spotting on objects around the the tower. The corrosion resistance of PVC assures you that you'll probably never have to replace eliminators for the life of the tower.

- Longer Service life. pressure-treated Russian fir structure and splash-fill bars, FRP fill support grids, PVC drift eliminators, and all other tower components are designed for years of service.

Series O15 Schematic

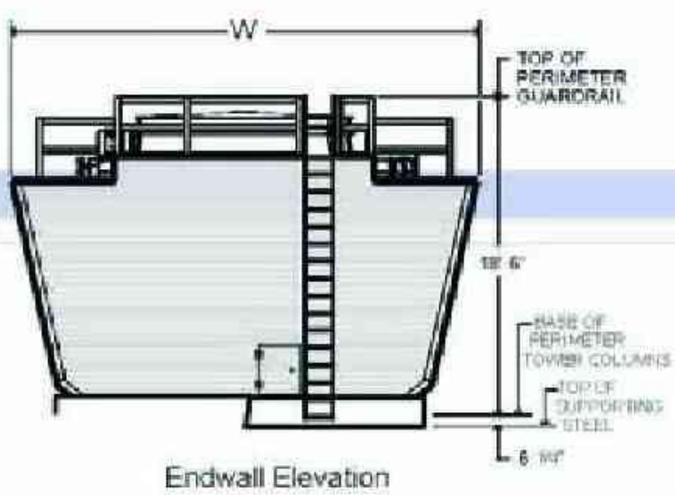

Endwall Elevation

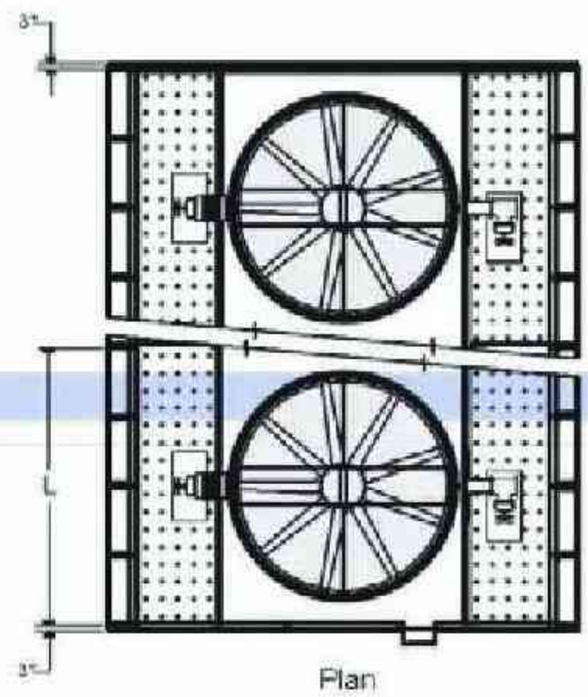

Plan

Tower Model Note 1	GPM per Cell	Dimensions		
		L	W	Fan diameter
OT451-201	201-2400	12' 0"	25' 0"	120"
OT452-201	270-3200	16' 0"	27' 0"	144"
OT453-201	340-4000	20' 0"	29' 0"	168"
OT454-201	410-4800	24' 0"	29' 0"	168"
OT456-201	285-3360	12' 0"	29' 0"	120"
OT457-201	380-4480	16' 0"	31' 0"	144"
OT458-201	475-5600	20' 0"	33' 0"	168"
OT459-201	570-6720	24' 0"	33' 0"	168"

Subject To Modification without notice

ISHRAI SATSA Member

Series Cubic Tower

Steel Crossflow Cooling Tower

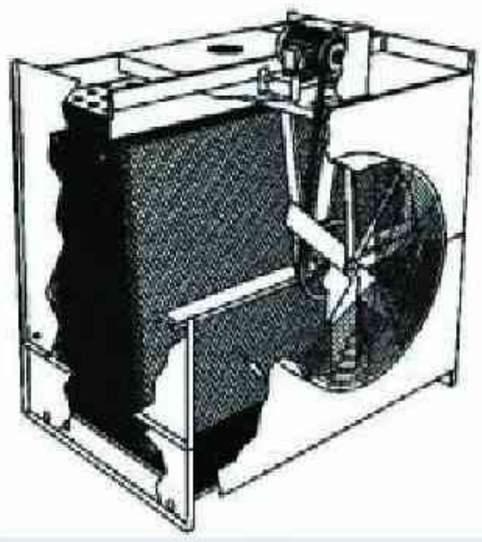

THE CUBICTOWER ADVANTAGE

■ **Induced - Draft Design.** Save on fan power and avoid the water leaks typical in forced - draft - Pressurized - Towers. The fan will operate in a warm atmosphere even in winter, so you'll never have to work on frozen mechanical equipment.

■ **Crossflow Design.** Save on pump power because you only pay to move the water to the top of the tower. Gravity does the rest. The mechanical equipment and water distribution system are out where you can easily maintain them.

■ **All-Season Reliability.** Cubic towers perform as specified in the heat of summer. They respond well to energy management techniques in the spring and fall and with appropriate fan controls, they can operate virtually ice-free in the dead of winter. Plus they Offer simple maintenance all year long.

■ **PVC Film Fill with Integral Drift Eliminators and Louvers.** If you've ever had to replace deteriorated eliminators or louvers, You'll appreciate this advantage. Now those components are molded right in the PVC fill sheets. Integral honey comb louvers keep the circulating water inside your tower.

■ **Select Your Aqua tower From This Bulletin .The table on page 6 Should be adequate for almost all your requirements.** If available space is a problem, or if you run into some unusual operating requirements, we'll be glad to help.

■ **Simple, Flexible Installation.** Just mount the motor, belts and belt guard, install the outlet connection that suits your needs-both side suction and bottom outlet are provided, complete with screens-nd adjust the float valve.

Schematic

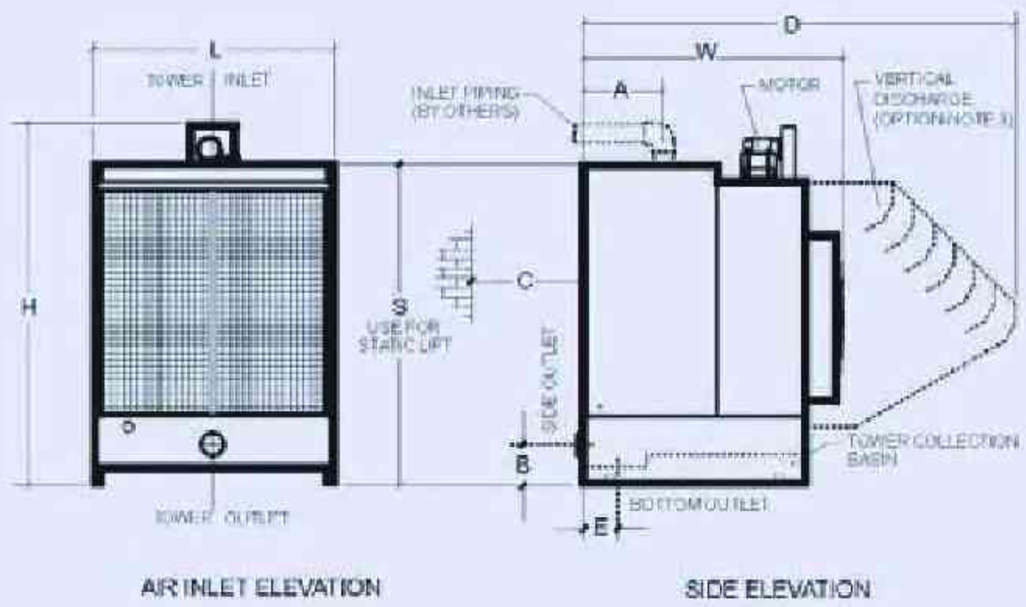

Tower Model	Nominal Tons 1	Dimensions									Motor hp	Piping Connections	
		L	W	H	A	B	C	D	E	S		Inlet	Outlet 6
OC480A	8	2-11 1/2"	4-2 7/8"	5-3 3/8"	1-3 13/816"	9 7/8"	2-0"	note 3	note6	4-3 7/8"	1/3"	2"	2" F
OC480B	10	902mm	1292mm	1610mm	402mm	175mm	610mm			1318mm	1		
OC492A	22	3-11 1/2"	5-0 3/4"	7-4 1/2"	1-5"	9 1/2"	4-0"		8"	6-5"	1	4"	4" M
OC492B	28	1206mm	1643mm	2248mm	432mm	241mm	1219mm		203mm	1956mm	2		
OC493A	36	5-11 1/2"	5-1	7-4 1/2"	1-5"	9 1/2"	5-0"		8"	6-5"	2		
OC493B	42	1816mm	1549mm	2248mm	432mm	241mm	1524mm		202mm	1956mm	3		
OC494A	51	5-11 1/2"	6-5 5/8"	9-0"	9-0"	11 1/2"	6-0"	10-8"	9 1/4"	7-10 5/8"	2	6"	6" MC
OC494B	57	1818mm	1972mm	2743mm	2743mm	292mm	1829mm	3251mm	235mm	2403mm	3		
OC494C	68										5		
OC495A	80	7-11 1/2"	6-5 3/4"	9-0"	1-11 15/16"	11 1/2"	7-0"	10-8"	9 1/2"	7-10 5/8"	5		
OC495B	91	2426mm	1875mm	2743mm	2743mm	292mm	2134mm	3251mm	235mm	2403mm	7 1/2"		
OC496A	111	9-11 1/2"	6-6 1/8"	9-8 1/4"	1-11 3/16"	11 1/2"	9-0"	10-11 11/16"	9 1/4"	8-6 3/4"	6		
OC496B	126	3035mm	1884mm	2953mm	2953mm	292mm	2743mm	3345mm	235mm	2610mm	7 1/2"		

Subject To Modification without notice

Omran Tahvieh Industrial Co.

Heating , Ventilation And Air Conditioning

OCC Series (15-300 TR)

CROSS FLOW SIDE DISCHARGE (CUBIC) COOLING TOWERS

Beltdriven

FEATURES:

- HDGS Axial Fan.
- Low consumption electro motor.
- Rugged heavy-guage galvanized steel structure.
- Splash-fill and drift eliminator bars.
- Lower operating and maintenance costs.

OMRAN TAHVIEH Cubic CoolingTower Approximate Dimensional Data:

MODEL	TONS NOMINAL	LENGHT	WIDTH	HIGHT		FAN NO.x DIA	MOTOR	PIPING CONNECTIONS					APPROXIMATE WEIGHT Kg	
				BODY	TOTAL			INLET	OUTLET	OVER FLOW	MAKE UP	DRAIN		
	TR	L	W	h	H	f	No. X HP						SHIPPING	OPERATING
OCC 15 -1	15	1300	1000	1500	1720	1 × 850	1 × 1/2	2 1/2"	2 1/2"	1/2"	1/2"	11/2"	370	800
OCC 20 -1	20	1300	1000	1600	1820	1 × 850	1 × 3/4	2 1/2"	2 1/2"	1/2"	1/2"	11/2"	400	900
OCC 25 -1	25	1300	1000	1700	1920	1 × 850	1 × 3/4	2 1/2"	2 1/2"	1/2"	1/2"	11/2"	500	1050
OCC 30 -1	30	1300	1000	1800	2020	1 × 1200	1 × 1	2 1/2"	2 1/2"	1/2"	1/2"	11/2"	580	1300
OCC 40 -1	40	2350	1450	1750	1970	1 × 1200	1 × 1	3"	3"	3/4"	1/2"	2"	810	1500
OCC 50 -1	50	2350	1450	1850	2070	1 × 1200	1 × 1.5	3"	3"	3/4"	1/2"	2"	1200	2300
OCC 65 -1	65	2350	1450	1950	2170	1 × 1200	1 × 1.5	3"	3"	3/4"	1/2"	2"	1300	2550
OCC 75 -1	75	2350	1450	2050	2270	1 × 1200	1 × 2	3"	3"	3/4"	1/2"	2"	1400	2700
OCC 90 -1	90	2500	1700	1950	2170	1 × 1350	1 × 2	4"	4"	1"	3/4"	2 1/2"	1700	300
OCC 110 -1	110	2500	1700	2050	2270	1 × 1350	1 × 3	4"	4"	1"	3/4"	2 1/2"	2100	3300
OCC 130 -1	130	2500	1700	2150	2370	1 × 1350	1 × 4	4"	4"	1"	3/4"	2 1/2"	2400	3800
OCC 150 -1	150	2600	1700	2250	2470	1 × 1400	1 × 5.5	4"	4"	1"	3/4"	2 1/2"	2600	4000
OCC 180 -2	180	2500	3380	1950	2170	1 × 1350	2 × 2	2 × 4"	6"	1"	3/4"	3"	3200	5800
OCC 220 -2	220	2500	3380	2050	2270	1 × 1350	2 × 3	2 × 4"	6"	1"	3/4"	3"	3900	6500
OCC 260 -2	260	2500	3380	2150	2370	1 × 1350	2 × 4	2 × 4"	6"	1"	3/4"	3"	4400	7500
OCC 300 -2	300	2600	3380	2250	2470	1 × 1400	2 × 5.5	2 × 4"	6"	1"	3/4"	3"	5000	9000

All dimensions are in mm

Subject To Modification without notice

Shaft and Bearing

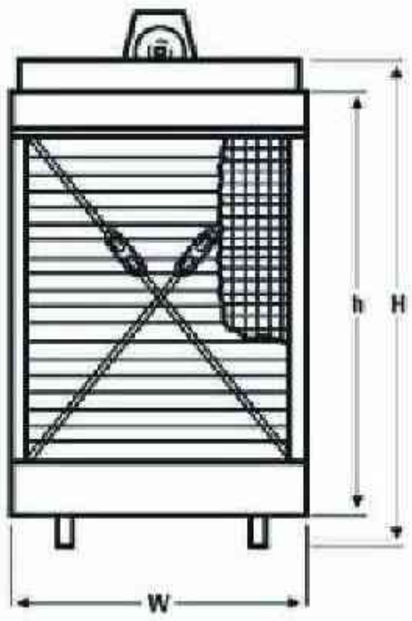

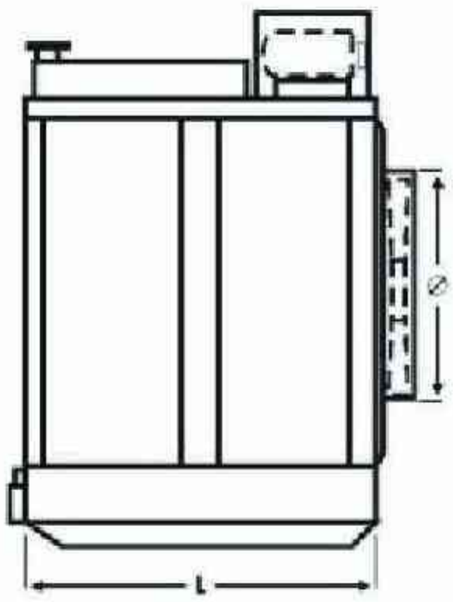

ISHRAI SATSA Member

Condensing Unit (OCU 240 - 840)

UNIT FEATURES

A. GENERAL

The Omran tahvieh Condensing units casing shall be fabricated from heave gauge galvanized steel, with painted Epoxy coat. The unit completely factory assembled and consists of a refrigerant compressors ,condenser coils, fans & control panel. These units can be installed on a roof or at ground level.

MODEL DECODING

1, 2, & 3 Basic	4, 5 & 6 Nominal Cooling Capacity (MBH)	7 Electrical Supply (V - Ph - Hz)	8 Refrigration Circuit	9 Compressor Type	10 Condenser Motor	11 Condenser Oil	12 PDS Option	13 Kits Electrical Options	14 Kits Mecanical Options
OCU Condensing Unit	240 300 360 420 480 600 720 840	H: 208/230 - 3 - 60 M: 380 - 3 - 60 (4 WIRE) F: 460 - 3 - 60 L: 380/415 - 3 - 50 (4 WIRE)	S: Single D: Dual	S: Scroll H: Semi Hermetic Reciprocating	N: Standard With FPS L: Low Ambient With FPS & FCS K: Standard Fan With APS J: Low Ambient With FCS & APS	A: Aluminum Fin P: PDS (Pump Down Solenoid)	N: No Option P: PDS (Pump Down Solenoid)	N: No Option U: UVM V: Volt Free continue ACTS+ B: Compressor Circuit Breaker C: U & V COMBO D: U & B COMBO E: V & B COMBO F: C & B COMBO	A: STD . Option D: Discharge Gas Sensor H:Hot Gas Bypass P: Condenser Pressure Relief Valve B: D & H COMBO C: D & P COMPO E:H & P COMBO F:D, H & P COMBO

B. UNIT ENCLOSURE

All panels are of heavy gauge (G - 90) galvanized steel. Steel sheet panels are galvanized by the hot dip process followed by painted epoxy coat. Removable access panels with handles are provided for maintenance purpose.

C. COMPRESSOR

dual scroll compressors used as standard for models OCU240,OCU300, OCU 360 with an option to use semi - hermetic reciprocating compressors. The compressors are equipped with internal motor protection and also provided with vibration isolators. Oil pressure control is provided on units with semi - hermetic compressors only. Each compressor has lock - out devices to protect it from short cycling when tripped by safety controls.

D. AIR COOLED CONDENSER

Coils are of the corrugated fin-and-tube type, constructed of seamless copper tubes of minimum thickness 0.014 inches (0.356 mm), mechanically bonded to aluminum fins. As an option, Corrugated copper or coated aluminum fins may be provided. End plates and tube support sheets are 18 gauge galvanized steel, formed to provide structural strength. Each Coil is pressure tested in the factory at not less than 300 psi (2070 kPa) air pressure.

E. SER VICE VALVES

Both suction and liquid service valves are steel, back seating type with sweat connections. Valves are externally located so Refrigerant tube connections can be made quickly and easily. Each valve has a gauge pressure port for ease of checking refrigerant operating pressures.

F. CONTROL PANEL

Internal power and control wiring is neatly routed, properly anchored and all wires Identified with cable Markers as standard applicable to HVAC units. The electrical controls used in the control panel are UL approved, which are reliable in operation at high ambient conditions for a long period.

PHYSICAL DATA - 60Hz & 50Hz Single compressor (hermetic) units

Model Number			OCU240	OCU300	OCU360	OCU420	OCU480	OCU600	OCU720	OCU840
NOMINAL CAPACITY , TONS* - Scroll / Semi hermetic			22/21	28/28	33/35	38	45	51	65	75
TOTAL UNIT POWER INPUT kW*-Scrol / Semi hermetic			22.8/24	31/35.2	34.9/41	45.7	52	62	79.6	93.6
EER ENERGY (EFFICIENCY RATIO)-Scrol / Semi hermetic			11.4/10.3	10.8/9.5	11.3/10.1	9.9	10.3	9.9	9.8	9.6
NUMBER OF REFRIGERATION CIRCUIT			Single	Single	Single	Single	Single	Single	Dual	Dual
COMPRESSOR	Type(stander)		Scroll	Scroll	Scroll	Semi-hermetic				
	Oil per system 02	Scroll	110	135	223	-	-	-	-	-
		Semi-hermetic	106	106	106	141	158	158	167	167
	Refrigerant		R-22							
	Charge per system (02)		360	450	540	630	720	900	1080	1260
CONDENSER FAN	Type		Propellor							
	Qty-Diameter (inch)		2 - 30	2 - 30	3 - 30	3 - 30	4 - 30	4 - 30	5 - 30	6 - 30
	Nominal CFM		15200	15200	22800	22800	30400	30400	3800	45600
	Motor HP -RPM		1.5 - 1100	1.5 - 1100	1.5 - 1100	1.5 - 1100	1.5 - 1100	1.5 - 1100	1.5 - 1100	1.5 - 1100
CONDENSER COIL	Type		Corrugated fin & tube							
	Tube Dia - Rows		5/8 - 4	5/8 - 5	5/8 - 4	5/8 - 4	5/8 - 4	5/8 - 5	5/8 - 4	5/8 - 5
	Total face area (Sq. Ft.)		28	25	46.66	46.66	56	56	70	70
HIGH PRESSURE SWITCH	Open (PSIG)		450 - 10	450 - 10	450 - 10	450 - 10	450 - 10	450 - 10	450 - 10	450 - 10
	Close (PSIG)		360 - 15	360 - 15	360 - 15	360 - 15	360 - 15	360 - 15	360 - 15	360 - 15
LOW PRES SURE SWITCH	Open (PSIG)		25 - 5	25 - 5	25 - 5	25 - 5	25 - 5	25 - 5	25 - 5	25 - 5
	Close (PSIG)		50 - 5	50 - 5	50 - 5	50 - 5	50 - 5	50 - 5	50 - 5	50 - 5
REFRIGERANT LINES	Suction line e size (OD), inch		1 - 3/8	1 - 3/8	1 - 5/8	1 - 5/8	2 - 1/8	2 - 1/8	2 - 1/8	2 - 1/8
	Liquid line e size (OD), inch		5/8	5/8	7/8	7/8	1 - 1/8	1 - 1/8	1 - 1/8	1 - 1/8
OPTIONAL COOLING STAGES **			4	4	4	4	4	4	4	4
SHIPPING WEIGHT, Kg.			860	900	1050	1100	1250	1300	1600	1750

Subject To Modification without notice

Omran Tahvieh Industrial Co.

Heating , Ventilation And Air Conditioning

Condensing Unit (OCU 030 - 120)

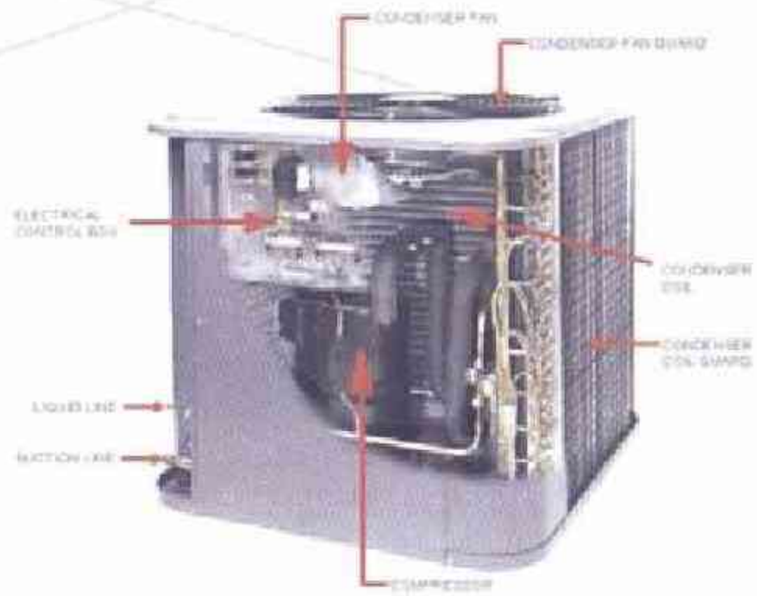

UNIT FEATURES

A.GENERAL

The Omran tahvieh Condensing units incorporate the latest innovative Technology to provide quiet, reliable performance. The wrap - around coil not only adds to the aesthetical appeal, it also gives optimum heat transfer efficiency The access panels provide access to the compressor and to the electrical control box. Removal of top panel gives access to fan motor and coil.

B. UNIT ENCLOSURE

All panels are of heavy gauge (G - 90) galvanized steel sheet and completely weatherized for outdoor Installation. Steel sheet panels are galvanized by the hot dip process followed by painted epoxy coat.

C. COMPRESSOR

Compressors are fully hermetic type and are provided with all the standard controls necessary for proper and s afe operation. These compressors have a self - regulating crankcase heater, Improved internal pressure relief valve which provides high pressure protection to the refrigerant system and vibration isolators for quiet and efficient operation.

D.AIR COOLED CONDENSER

The large wrap-around condenser coil is of corrugated fin & tube type, constructed of seamless copper tubes with wall thickness of 0.014" (0.356mm), (0.356mm) and, Mechanically bonded to aluminum fins. All copper tube return bends bends 0.022"(0.56mm) wall thickness. As an option to aluminum fins, coated aluminum fins or corrugated copper fins may be provided.

E.SER VICE VALVES

Both suction and liquid service valves are steel, back seating type with sweat connections. Valves are externally located so Refrigerant tube connections can be made quickly and easily. Each valve has a gauge pressure port for ease of checking refrigerant operating pressures.

F. HIGH PRESSURE SWITCH

Auto reset SPST switch activated by refrigerant pressure - locks out the compressor, if the refrigerant pressure rises above 450 PSIG. Also provides additional protection against compressor damage due to loss of outdoor Airflow.

G. LOW PRESSURE SWITCH

Auto reset SPST switch activated by refrigerant pressure - locks out the compressor, if the refrigerant pressure falls below 25 PSIG. Also provides additional protection against evaporator freeze up due to loss of indoor airflow.

MODEL DECODING

1, 2, & 3 Basic	4, 5 & 6 Nominal Cooling Capacity (MBH)	7 Electrical Supply (V - Ph - Hz)	7 Refrigration Circuit	8 Compressor Type	9 Mode	10 Condenser Motor	11 Condenser Oil	12 Accessories	13 Options
OCU Condensing Unit	030 036 042 048 060 075 090 100 120	C: 208/230 - 1 - 60* B: 220/240 - 1 - 50* H: 208/230 - 3 - 60 M: 380 - 3 - 60 (4 WIRE) F: 460 - 3 - 60 L: 380/415 - 3 - 50 (4 WIRE)	S: Single D: Dual**	R: Hermetic Reciprocating S: Hermatic Scroll	C: Cool Only H: Heat Pump	N: Standard L: Low Ambient	A: Aluminum Fin B: Coated Aluminum Fin C: Copper Fin	N: Standard Unit P: Standard Unit With POS*** C: Spring Isolators F: Standard Unit With Filter Drier & Sight Glass S: P & F	N: No Option U: UVM V: Volt Free Contacts**** C: U & V

PHYSICAL DATA - 60Hz & 50Hz Single compressor (hermetic) units

Model Number		OCU 030	OCU 036	OCU 042	OCU 048	OCU 060	OCU 075	OCU 090	OCU 100	OCU 120
NOMINAL CAPACITY (TONS) *		25	3	305	4	5	6	7	8	10
COMPRESSOR	TYPE	Hermetic								
	Quantity	1	1	1	1	1	1	1	1	1
	oil (oz)-60Hz	50	50	50	55	70	60.9	62.4	128	128
	oil (oz)-50Hz	50	50	55	55	61	60.4	126	128	132
	refrigerant	R-22								
	Operating Charge (oz)-60Hz	106	106	120	167	170	200	301	314	330
	Operating Charge (oz)-50Hz	106	106	120	167	170	210	304	317	352
CONDENSER FAN	Type	Propeller								
	Oty. - Diameter (inch)	1 - 18	1 - 18	1 - 22	1 - 22	1 - 22	2 - 22	2 - 22	2 - 22	2 - 22
	Nominal air flow, CFM (L/S)	2300 (1035)	2300 (1035)	3050 (1723)	3950 (1723)	3950 (1723)	5300 (2501)	5300 (2501)	5600 (2843)	5600 (2843)
	Motor HP - RPM	1/4 -900		1/3 -900			1/4 - 900 (2)			
CONDENSER COIL.	Type	Corrugated fin & tube								
	Tube Dia-Rows-Fins Per inch	3/8 - 2	3/8 - 2	3/8 - 1	3/8 - 2	3/8 - 2	3/8 - 2	3/8 - 2	3/8 - 2	3/8 - 2
	Total face area, Sq (Sq. M)	10 (0.929)	10 (0.929)	16 (1.40)	16 (1.40)	16 (1.48)	21 (1.05)	21 (1.95)	24 (2.23)	24 (223)
HIGH PRESSURE SWITCH	Open (PSIG)]	450 - 10	450 - 10	450 - 10	450 - 10	450 - 10	450 - 15	450 - 10	450 - 10	450 - 10
	Close (PSIG)	360 - 15	360 - 15	360 - 15	360 - 15	360 - 15	360 - 15	360 - 15	360 - 15	360 - 15
LOW PRESSURE SWITCH	Open (PSIG)	25 - 5	25 - 5	25 - 5	25 - 5	25 - 5	25 - 5	25 - 5	25 - 5	25 - 5
	Close (PSIG)	50 - 5	50 - 5	50 - 5	50 - 5	50 - 5	50 - 5	50 - 5	50 - 5	50 - 5
REFRIGERANT LINES **	Suction line size (OD) - inch	7/0	7/0	1 - 1/8	1 - 1/8	1 - 1/8	1 - 3/8	1 - 3/8	1 - 3/8	1 - 3/8
	Liquid line size (OD) - inch	3/8	3/8	3/8	3/8	1/2	5/6	5/8	5/8	5/8
SHIPPING WEIGHT	Kg. (60Hz)	84	86	105	110	117	200	210	235	240
	Kg.(50Hz)	84	86	105	105	118	204	242	235	240

Subject To Modification without notice

ISHRAI SATSA Member

Single Packaged Roof Top Air Conditioners

General

Packaged cooling combination heating and cooling types suitable for mounting on the roof or ground. The packaged unit consists of refrigerant compressors cooling coil, condenser coil, fans, electric heater (optional), control wiring and interconnecting piping n all factory assembled. And mounted on a heavy gauge g-90 galvanized steel sheet press formed base, ready for field connection to utilities, roof curbs and ducts. The packaged unit is of rigid construction with holes provided in the base rails for overhead rigging. The unit is provided with an integral weather resistant control panel suitable for remote thermostat control. These units are of single cabinet construction and can be supplied with side/bottom supply air, and side / bottom return air arrangement to provide optimum installation flexibility. These units can be provided with additional accessories like economizer, manual fresh air damper with hood & pre-filters, cooling & heating thermostat.

Unit enclosure

Frame design is made of galvanized steel vertical posts, cross channels & supporting brackets joined together bolted.
Steel sheet panels are galvanized by the hot dip process.

MODEL DECODING

1, 2 & 3 Basic	4, 5 & 6 Nominal Cooling Capacity (MBH)	7 Electrical Supply (V - Ph - Hz)	8 Refrigeration Circuit	9 Compressor Type	10 Drive Options (See Table Below)	11 Heater Options (kw/stage)	12 Cond. Motor	13 Evaporator Coil	14 Condenser Coil	15 Filter	16 Unit Accessories	17 PDS Option	18 Other Options	19 Discharge (Supply Air)	20 Inlet (Return Air)
OPU PACK-AGED UNIT	185 225	H: 208/230-3-60 M: 380-3-6 (4 WIRE) F: 460-3-60 L: 380/415-3-50 (4 WIRE)	D: DUAL S: SINGLE	S: SCROLL R: HERMETIC RECIPROCAT-ING	J: ALT. I K: ALT. II	N: NO HEATER C: 7.5/1 D: 10/2 E: 12/2 F: 15/2 G: 20/2 H: 25/2 J: 30/2	N: STD. WITH FPS L: LOW AMB. WITH FPS K: STD. WITH APS J: LOW AMB.W/-APS	A: Aluminum Fin B: COATED Aluminum Fin C: COPPER FIN	A: ALUMINUM FIN B: COATED ALUMINUM FIN C: COPPER FIN	B: 2"AL. (STD). N: NO FILTER	N: STD. UNIT/ NO OPTIONS A: ECONOMIZER (RETURN AIR SIDE) B: ECON. WITH ENTHALPY SENSOR (RETURN AIR SIDE) C: FRESH AIR HOOD & MANUAL DAMPER D: ECONOMIZER (RETURN AIR BOTTOM) E: ECON. WITH ENTHALPY SENSOR (RETURN AIR BOTTOM)	N: NO PDS P: PDS	N: ON OPTION I: ANTI ICE TSTAT. U: UVM V: VOLT FREE CON-TACTS* A: I & U B: I & U C: U & V D: I U & V	B: BOTTOM S: SIDE	B: BOTTOM S: SIDE
	240 300	H: 208/230-3-60 M: 380-3-60 (4 WIRE) F: 460-3-60 L: 380/415-3-50 (4 WIRE)	D: DUAL S: SINGLE	S: SCROLL R: HERMETIC RECIPROCAT-ING H: SEMI HERMETIC RECIPROCAT-ING	J: ALT.I K: ALT.II	N: NO HEATER D: 10/2 E: 12/2 F: 15/2 G: 20/2 H: 25/2 J: 30/2 K: 35/2 L: 40/2 M: 50/2 P: 60/2									

Subject To Modification without notice

OMRAN TAHVIEH

Omran Tahvieh Industrial Co.

Heating , Ventilation And Air Conditioning

OFCB-IND-DZ Dust Proof Cooling Towers

Designed for cement plants, steel plants, gypsum plants, and other dusty zones.

General Specifications

FAN AND FILTER BOX FRAMES: Constructed by Aluminium profil and corners.
CASING: Hot dip galvanized steel and fiber glass.
FILL: Heavy duty PVC fill pack.
FILTER : Multi special bed air inlet filters .
FAN: Balanced forward curved centrifugal fans.
ELECTROMOTOR: TEFC, three phase, IP54 or IP55, F class electromotor.
DAMPER: air inlet and outlet opposed blade Aluminium profil dampers.
ACCESSORIES: Sand trap, FRP hood, FRP doors, backdraft damper, special Nozzels, special pullies.

Patent No. : 38602922

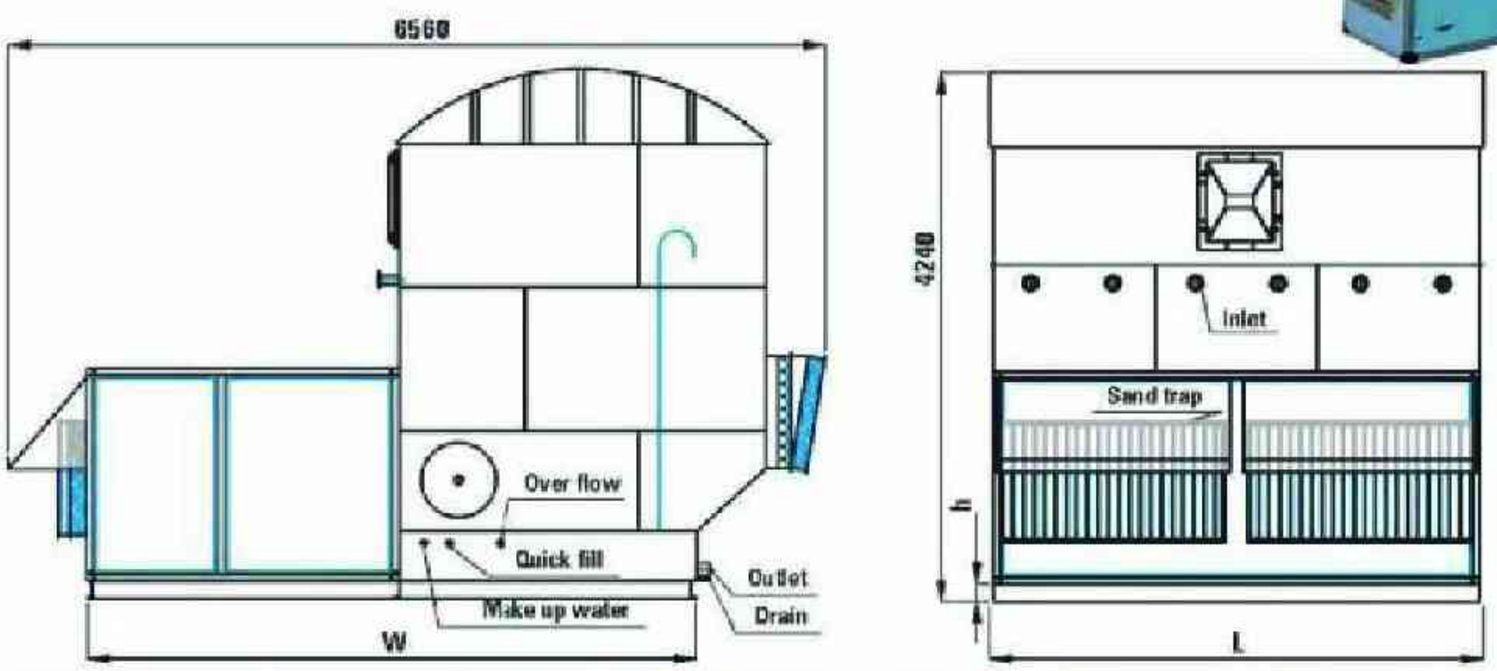

Model	Nominal Tons	Nominal GPM(us)	Electro Motor	L (cm)	W (cm)	h (cm)	Blower Qnt.	Blower Dia.
OFCB-IND-DZ-10	10	30	1 × 3/4	50	490	10	1	15"
OFCB-IND-DZ-15	15	45	1 × 1	75	490	10	1	15"
OFCB-IND-DZ-20	20	60	1 × 1 1/2	95	490	10	1	15"
OFCB-IND-DZ-25	25	75	1 × 2	95	490	10	1	18"
OFCB-IND-DZ-30	30	90	1 × 3	95	490	10	1	18"
OFCB-IND-DZ-35	35	105	1 × 3	95	490	10	1	22"
OFCB-IND-DZ-40	40	120	1 × 3	95	490	10	1	22"
OFCB-IND-DZ-50	50	150	1 × 3	95	490	10	1	22"
OFCB-IND-DZ-60	60	180	1 × 4	95	490	10	1	22"
OFCB-IND-DZ-75	75	225	1 × 5.5	120	490	12	1	22"
OFCB-IND-DZ-90	90	270	1 × 7.5	175	490	12	1	22"
OFCB-IND-DZ-105	105	315	1 × 7.5	190	490	12	2	22"
OFCB-IND-DZ-120	120	360	1 × 10	195	490	12	2	22"
OFCB-IND-DZ-140	140	420	1 × 15	215	490	12	2	22"
OFCB-IND-DZ-160	150	480	1 × 10 + 1 × 5.5	295	490	12	3	22"
OFCB-IND-DZ-180	180	540	1 × 10 + 1 × 5.5	300	490	12	3	22"
OFCB-IND-DZ-200	200	600	1 × 10 + 1 × 5.5	335	490	12	3	22"
OFCB-IND-DZ-250	250	750	2 × 10	395	490	14	4	22"
OFCB-IND-DZ-300	300	900	2 × 10 + 1 × 5.5	495	490	14	5	22"
OFCB-IND-DZ-350	350	1050	3 × 10	595	490	14	6	22"
OFCB-IND-DZ-400	400	1200	3 × 10	680	490	14	6	22"
OFCB-IND-DZ-450	450	1350	3 × 10 + 1 × 5.5	740	490	14	7	22"
OFCB-IND-DZ-500	500	1500	4 × 10	790	490	14	8	22"
OFCB-IND-DZ-600	600	1800	4 × 10 + 2 × 5.5	990	490	14	10	22"
OFCB-IND-DZ-700	700	2100	6 × 10	1190	490	14	12	22"
OFCB-IND-DZ-800	800	2400	6 × 10	1360	490	14	12	22"
OFCB-IND-DZ-900	900	2700	6 × 10 + 2 × 5.5	1480	490	14	14	22"
OFCB-IND-DZ-1000	1000	3000	8 × 10	1620	490	14	16	22"
OFCB-IND-DZ-1200	1200	3600	10 × 10	1990	490	14	20	22"

Subject To Modification without notice

ISHRAI SATSA Member

Air Cooled Water Chillers (R-134a)

These MALC air cooled screw water chillers offer the ultimate combination of energy saving design superior engineering features and flexibility of application as by today is market.

* These chillers incorporate the newest advanced Microprocessor controller. This controller monitors analog and digital inputs to achieve precise control & protective functions of the air cooled water chiller units. This microprocessor controller is complete with all the hardware and software necessary to control the chiller unit and insures its efficiency and reliability.

* Compact unit design and excellent serviceability.

MODEL DECODING

1, 2, 3 & 4 Basic (Series)	5, 6 & 7 Nominal Cooling Capacity (MBH)	8 Electrical Supply (V - Ph - Hz)	9 Compressor Type	10 Condenser Coil	11 Controls	12 Unit Accessories	13 Circuit Breaker Options	14 Other Options
Malc Air Cooles Water Chillers	040 050 060 070 075 090 100 120 140 150 170 190 220 250 270 290 300 330 350 370 380 410 440 470 500 540 580 600 660 700 740	H: 208/230-3-60 M: 380-3-50 (4 Wire) F: 460-3-60 N: 380-3-50 (4 Wire)	X: Screw Y: Reciprocate	A: Aluminum Fin B: Coated Aluminum Fin C: Copper Fin D: Electro Tinned Copper Fin J: Aluminum Fin With Fin Guard K: Coated Aluminum Fin With Fin Guard L: Copper Fin With Fin Guard M: Electro Tinned Copper Fin With Fin Guard	S: Standard P: Microprocessor	A: Standard B: Water Flow Switch C: Spring Isolators D: Hot Gas Bypass E: B+C COMBO F: B+D COMBO G: C+D COMBO H: B +C+D COMBO	A: Standard B: Compressor Circuit Breaker C: Condenser Fan Circuit Breaker D: Non Fused Disconnect Switch E:B+C COMBO F: B+D COMBO G: C+D COMBO H: B+C+D COMBO	A: Standard B:Electronic Thermal Expansion Valve C: Compressor Enclosure D: Variable Speed Condenser Fan Motors For Low Ambient E: Pressure Gauges F : Victaulic Cooler Connection G: Compressor Cooler Guard H: Any Combination of Above (Please Specify)

* All packaged chillers incorporate compact water coolers with low fin copper tubes that expanded into a steel tubular sheet which offer efficient water flow as well as heat transfer design resulting in optimal unit performance.

* High Energy Efficiency Ratio (EER) semi - hermetic compact screw and reciprocate compressors provided in these units.

* Economizer operation is a optional feature to optimize cooling capacity.

* Single point power connection to minimize job site installation cost and time.

* Completely wired control panel provides all the necessary operating and safety controls.

* Compressors are with part winding start.
* Low noise condenser fans direct drive with rolled form venturi design to eliminate short circuiting of airflow.
* All fans are aerodynamic design top discharge provided with protective grille mounted on top panel within the unit casing.
* All condenser fan motors are totally enclosed air over type (TEAO) with class "F" winding insulation and ball bearings.

The packaged chillers incorporate stepped load shedding as required by most energy management systems.
Capacity control is achieved by cycling compressor ON/OFF or capacity control valve. The use of control valve provides On multiple compressor units capacity is controlled by a combination of capacity control valve and compressor staging. See the following table for the capacity control for each unit.

Subject To Modification without notice

OMRAN TAHVIEH

Omran Tahvieh Industrial Co.

Heating , Ventilation And Air Conditioning

Industrial Unit Heater (OUI Series)

FEATURES:

- Centrifugal HDGS Fan.
- Three or single phase electromotor.
- Steel casing and damper.
- Copper or Steel Coil tube.
- Al. Or Steel or Copper fin.
- Adjustable special damper.
- Low maintenance and installation costs.

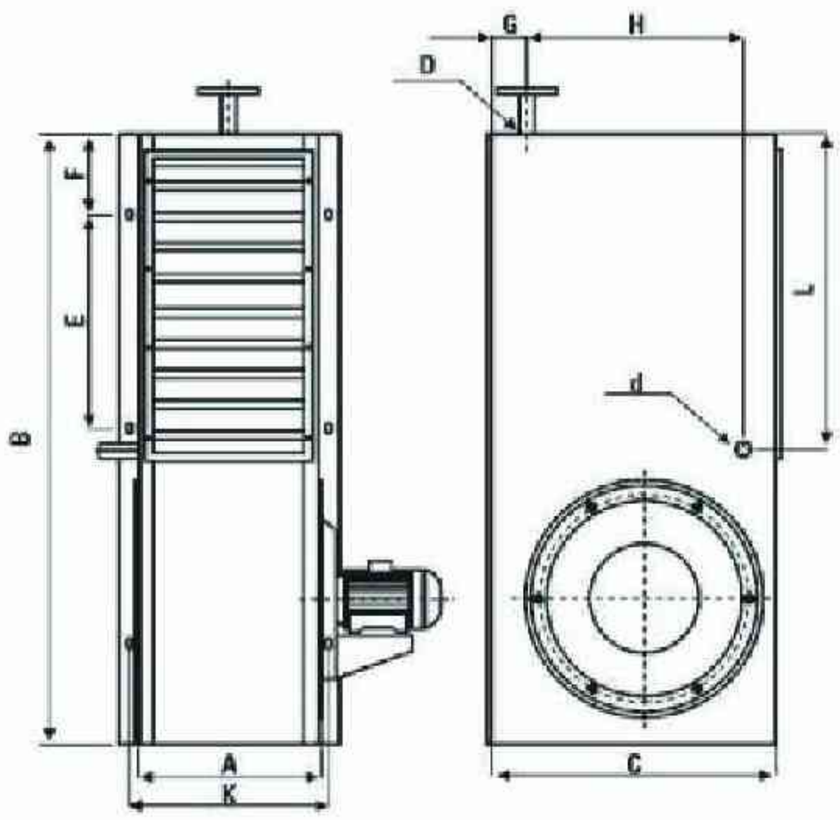

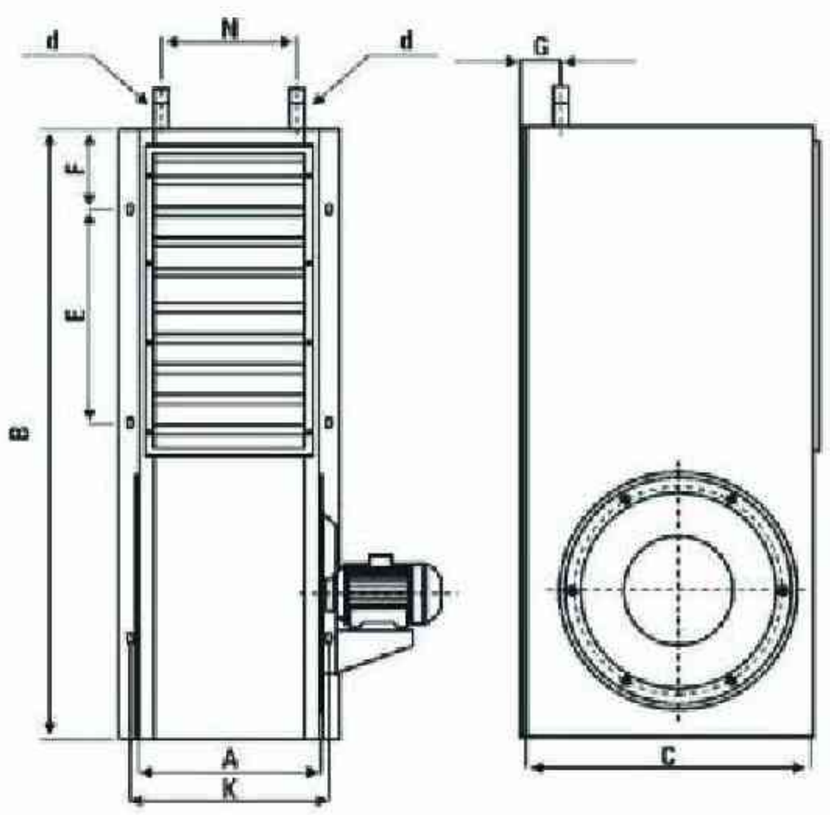

Model	Air m^3/h	Motor 380V-KW	Hot Water 90°C/70°C	Very hot Water130°C/90°C	0.1 bar steam	Approx. Weight Kg
			Kcal/h	Kcal/h	Kcal/h	
OUI 05	1300	0.25	5000	8000	10200	50
OUI 06	1300	0.25	6000	9000	11000	55
OUI 08	1300	0.25	8000	11400	13300	60
OUI 10	1300	0.25	10000	15000	15800	66
OUI 12	1500	0.25	12000	15800	16600	87
OUI 16	2200	0.25	16000	21700	22000	92
OUI 20	2200	0.25	20000	27000	26300	110
OUI 24	3300	0.37	24000	35000	33500	125
OUI 28	3300	0.37	28000	39500	38000	142
OUI 32	3300	0.37	32000	43000	41200	160
OUI 40	5250	0.55	40000	57500	54000	235
OUI 50	5250	0.55	50000	70000	62000	240
OUI 60	8000	0.75	60000	88000	75000	250

Subject To Modification without notice

ISHRAI SATSA Member

Unit Heater (Hot Water & Steam)

FEATURES:

- Axial HDGS or polyamide or Al. fan
- Three or single phase electromotor.
- Steel casing and damper.
- Copper or Steel Coil tube.
- Al. Or Steel or Copper fin.
- Adjustable special damper.
- Low maintenance and installation costs.

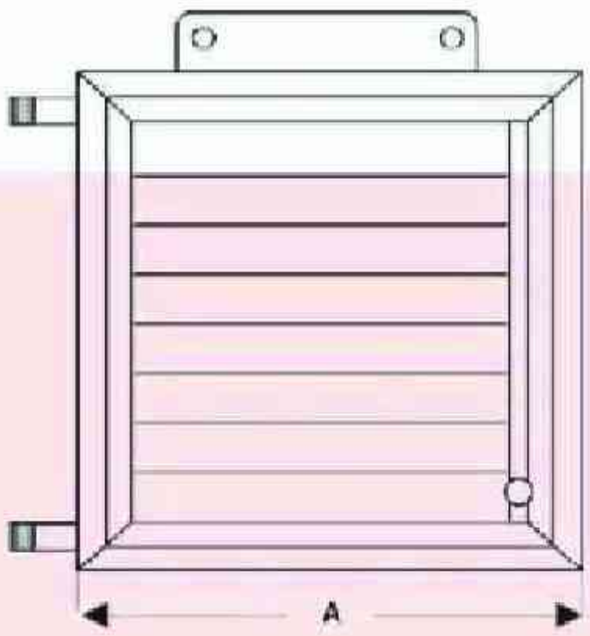

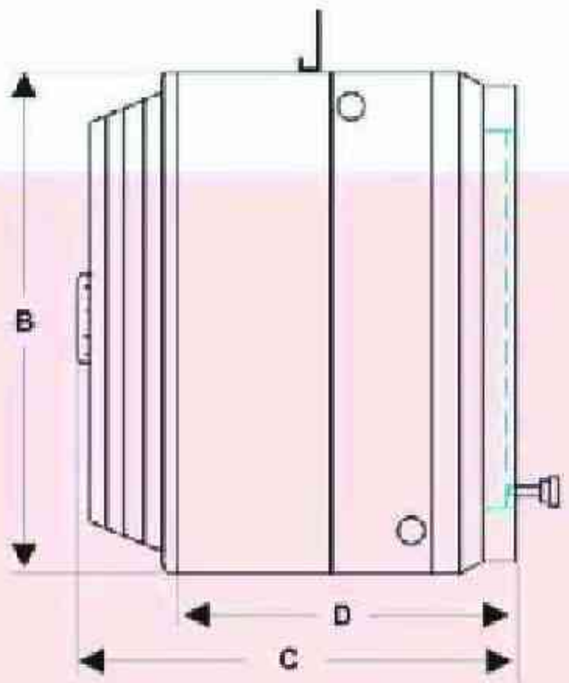

TECHNICAL AND CAPACITY DATA

MODEL	ELECTROMOTOR			Ventilator Diameter	Ventilator Model	Damper Dimensions	A	B	C	D	Coil Dimensions	Coil Header	Nominal m^3/hr
	WATT	R.P.M	PH										
10U 40-1400	120	1400 RPM	Single Phase	30 cm	VIK-30L4S	38×38	52	52	55	42	51×37 cm 2 Rows/8 FPI	1 ¼"	2500
10U 50-1400	140			35 cm	VIK-35L4S	38×38	52	52	55	42	51×37 cm 2 Rows/8 FPI	1 ¼"	3400
10U 80-1400	230			40 cm	VIK-40L4S	45×45	60.5	60.5	55	42	60×35.6 cm 2 Rows/8 FPI	1 ¼"	4400
10U 140-1400	250			45 cm	VIK-45L4S	45×45	60.5	60.5	55	42	60×46.5 cm 2 Rows/8 FPI	1 ¼"	5100
10U 180-1400	420			50 cm	VIK-50T4S	53×53	66.5	66.5	55	42	60×52 cm 2 Rows/8 FPI	1 ¼"	7800
20U 280-1400	2×250			2×45 cm	2×(VIK-45L4S)	105×45	123	60.5	55	42	60×90 cm 2 Rows/8 FPI	1 ½"	10200
20U 360-1400	2×420			2×50 cm	2×(VIK-50T4S)	115×53	133	66.5	55	42	60×104 cm 2 Rows/8 FPI	1 ½"	15600
10U 40-900	90	900 RPM	Single Phase	30 cm	VIK-30L6S	38×38	52	52	55	42	51×37 cm 2 Rows/8 FPI	1 ¼"	1600
10U 50-900	100			35 cm	VIK-35L6S	38×38	52	52	55	42	51×37 cm 2 Rows/8 FPI	1 ¼"	2200
10U 80-900	152			40 cm	VIK-40L6S	45×45	60.5	60.5	55	42	60×41.8 cm 2 Rows/8 FPI	1 ¼"	3060
10U 100-900	160			45 cm	VIK-45L6S	45×45	60.5	60.5	55	42	60×46.5 cm 2 Rows/8 FPI	1 ¼"	3350
10U 130-900	170			50 cm	VIK-50T6S	53×53	66.5	66.5	55	42	60×52 cm 2 Rows/8 FPI	1 ¼"	5500
20U 200-900	2×160			2×45 cm	2×(VIK-45L6S)	105×45	123	60.5	55	42	60×90 cm 2 Rows/8 FPI	1 ½"	6700
20U 260-900	2×170			2×50 cm	2×(VIK-50T6S)	115×53	133	66.5	55	42	60×104 cm 2 Rows/8 FPI	1 ½"	11000

Subject To Modification without notice

Condensing Unit (OCU150 - 360)

FEATURES

A. GENERAL

The Omran Tahvieh condensing units casing shall be fabricated from heavy gauge galvanized steel. The unit is completely factory assembled and consists of a refrigerant compressors, condenser coils, fans & control panel.

These condensing units can be combined with a wide variety of evaporator coils and blower packages to provide quiet and dependable comfort. These units can be installed on roof or at ground level.

MODEL DECODING

1, 2, & 3 Basic	4, 5 & 6 Nominal Cooling Capacity (MBH)	7 Electrical Supply (V - Ph - Hz)	8 Refrigeration Circuit	9 Compressor Type	10 Mode	11 Condenser Motor	12 Condenser Coil	13 PDS Option	14 Other Option
OCU CONDENSING UNIT	150 180 220 240 300 360	H: 208 / 230-60 M: 380-3-60 (4 WIRE) F: 460-3-60 L: 380 / 415-3-50 (4 WIRE)	S: SINGLE D: DUAL	S: SCROLL R: HERMETIC RECIPROCATING H: SEMI HERMETIC RECIPROCATING	C: COOL ONLY	N: STANDARD L: LOW AMBIENT	A: ALUMINUM FIN B: COATED ALUMINUM FIN C: COPPER FIN	N: NO OPTION P: PDS	N: NO OPTION U: UVM V: VOLT FREE CONTACTS C: U & V

B. UNIT ENCLOSURE

All panels are of heavy gauge (G - 90) galvanized steel sheet. Steel sheet panels are zinc coated and galvanized by the hot dop process.

C. COMPRESSOR

Scroll or reciprocating compressors are used making these air conditioning equipment truly superior. The major benefits of scroll compressors are:

1. Low sound level: Quieter operation because of no dynamic suction and discharge valves action.
2. Low vibration and discharge pulses.
3. High energy efficiency: Because of high volumetric efficiency it minimize pressure and heat transfer losses.
4. High capacity: Due to its mass flow and high compression ratios.
5. High durability: With its robust design, few moving parts, low motor strains, large internal volume for liquid handling makes this compressor highly reliable.
6. High charge limit Therefore, lower applied costs as no suction accumulator required, no need for pump down system and check valve in discharge line.

D. AIR COOLED CONDENSER

1. The large wrap-around condenser coil is of corrugated fin & tube type, constructed of seamless copper tubes with wall thickness of 0.014" (0.356 mm), and mechanically bonded to aluminum fins. All copper tube return bends have 0.022" (0.56 mm) wall thickness. As an option, coated aluminum fins or corrugated copper fins may be provided. Tube support sheets are of galvanized steel, formed to provide structural strength. Tubes are circuited to ensure minimum pressure drop and maximum heat transfer. Each coil is completely dehydrated, charged and sealed at the factory upon completion of pressure tests.
2. The fans are propeller type and direct - driven, up ward discharge provided by the stamped fan grille.
3. Units are equipped with totally enclosed fan motors for greater reliability and dependable performance for many years.

E. SERVICE VALVES

Both suction and liquid service valves are steel, back seating type with sweat connections. Valves are externally located so refrigerant tube connection can be made quickly and easily. Each valve has a gauge pressure port for ease of checking refrigerant operating pressures.

F. HIGH PRESSURE SWITCH

Auto rest SPST switch activated by refrigerant pressure-locks out the compressor, if the refrigerant pressure rises above 450 PSIG. Also provides additional protection against compressor damage due to loss of outdoor airflow.

OPTIONS

A. LOW AMBIENT OPTION

Low ambient operation down to 40°F using fan cycling switch.

B. PUMP DOWN SOLENOID VALVE

Pump down solenoid valve keeps the evaporator coil dry of liquid refrigerant.

Subject To Modification without notice

ISHRAI SATSA Member

Plate Heat Exchanger

Exchanger dimension data

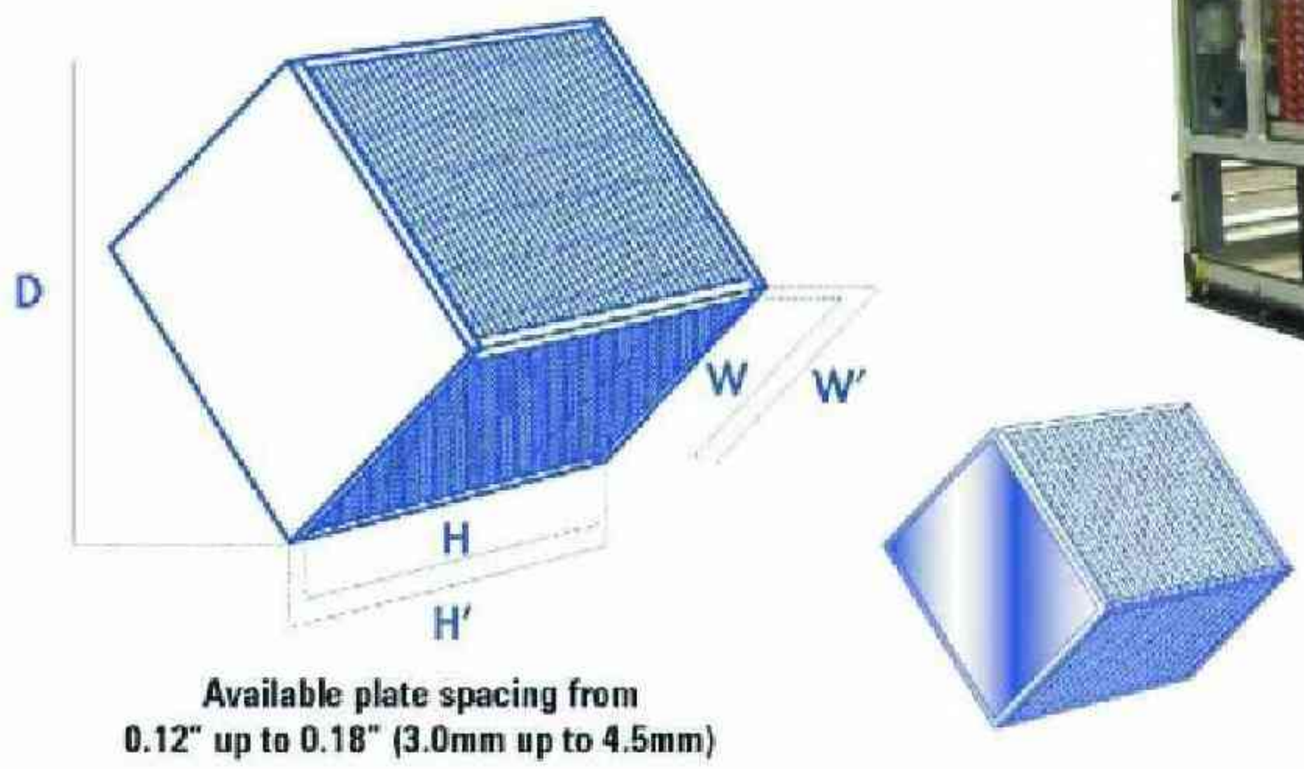

Available plate spacing from
0.12" up to 0.18" (3.0mm up to 4.5mm)

The Omran air to air exchanger is capable of recovering up to 80% of the sensible energy normally exhausted, providing HVAC systems with higher energy efficiency and lower operational costs. This passive heat exchanger has no external power requirements and provides the owner with an economical alternative to more expensive heat recovery methods.

Advantages

FLEXIBILITY:

■ Cost effective for any dimension: we manufacture our heat exchanger around your design, not ours.

TECHNICAL SUPPORT:

■ Several years of experience in research & development in the energy recovery technology.

EFFICIENCY:

■ Independently tested, and proven to be one of the most efficient heat exchangers on the market.

SOFTWARE:

■ User friendly software is available to assist during the selection process and give the complete design characteristics.

Model Number	Inside Width W (in/mm)	Overall Width W' (in/mm)	Diagonal D (in/mm)	Inside Height H (in/mm)	Overall Height H' (in/mm)
12S	10-11/16" (272mm)	12-1/4" (311mm)	17-5/16" (440mm)	H' - 3/4" (H' - 19mm)	As your selection
15S	13-11/16" (348mm)	15-1/4" (388mm)	21-9/16" (548mm)		
18S	16-3/4" (426mm)	18-1/4" (464mm)	25-13/16" (656mm)		
24S	21-1/4" (540mm)	24-1/4" (616mm)	34-5/16" (872mm)		
27S	24-1/4" (616mm)	27-1/4" (692mm)	38-9/16" (980mm)		
33S	30-1/4" (769mm)	33-1/4" (845mm)	47-1/16" (1196mm)		
36S	33-7/16" (850mm)	36-7/16" (926mm)	51-1/2" (1308mm)		
42S	39-7/16" (1002mm)	42-7/16" (1078mm)	60" (1524mm)		
48S	45-7/16" (1154mm)	48-7/16" (1231mm)	68-1/2" (1740mm)		

All tolerances are +/- 1/16" (+/- 2mm)

Subject To Modification without notice

ELECTERICAL DATA

MODEL	ELECTERIC MOTOR					UNIT
	NO×HP	RPM	FULL LOAD AMPS	LOCKED ROTOR AMPS	WEIGHTS NO×(kg)	FULL LOAD AMPS
OACC-045	1×0.75	950	1.7	8.5	1×9	1.7
OACC-085	1×1.5	950	3.2	16	1×13	3.2
OACC-120	2×1.5	950	3.2	16	2×13	6.4
OACC-180	2×1.5	950	3.2	16	2×13	6.4
OACC-250	3×1.5	950	3.2	16	3×13	9.6
OACC-350	4×1.5	950	3.2	16	4×13	12.8
OACC-450	5×1.5	950	3.2	16	5×13	16.0
OACC-550	6×1.5	950	3.2	16	6×13	19.0
OACC-700	8×1.5	950	3.2	16	8×13	25.0
OACC-850	10×1.5	950	3.2	16	10×13	32.0
OACC-1000	12×1.5	950	3.2	16	12×13	35
OACC-1200	12×1.5	950	3.2	16	12×13	35

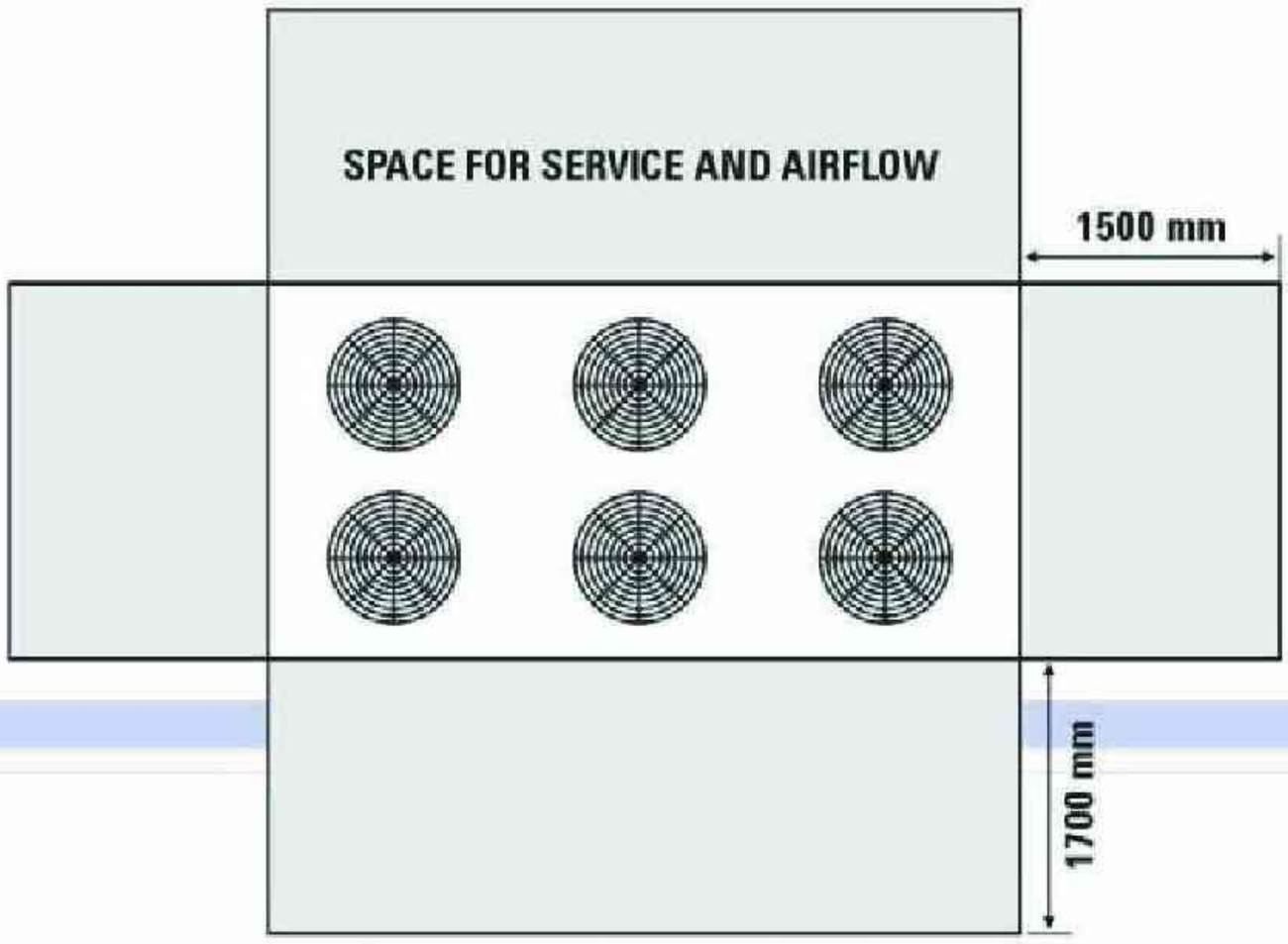

SERVICE & MAINTENANCE ACCESS AREA

OPTIONS:

- Adjustable blade axial fan.
- Metal or plastic axial fan.
- Al. Or copper with protector fin coating.
- Ex electrical panels and electromotors.
- F.R.P. Panels.

Subject To Modification without notice

ISHRAI SATSA Member

OACC Air Cooled Condenser

- 950 or 1450 quiet direct driven Fan motors.
- Rugged heavy-gauge galvanized Steel motor mounts / support.
- All fan sections individually baffled with full height partitions, and Clean-out panels.
- Complete Selection of electrical Fan cycling and speed Control options.
- Heavy-gauge galvanized steel Cabinet Construction assembled with Zinc plated huck bolts Supported on heavy duty legs.
- Weather protected motors.
- Basket guard for each fan.
- Fiber glass venturi.
- High efficiency aluminum fin Coils.

HEAT REJECTION (MBH)							
MODEL	TD °F						
	10	15	20	25	30	35	40
OACC-045	23	35	48	60	70	81	95
OACC-085	45	68	92	115	135	156	183
OACC-120	67	102	138	173	203	234	275
OACC-180	89	136	184	230	271	311	366
OACC-250	135	205	279	349	410	471	554
OACC-350	176	268	364	455	535	616	723
OACC-450	221	336	457	571	672	734	908
OACC-550	272	413	560	701	825	949	1114
OACC-700	358	542	738	922	1084	1248	1463
OACC-850	451	684	930	1162	1367	1572	1846
OACC-1000	544	825	1122	1402	1650	1897	2227
OACC-1200	626	949	1290	1613	1898	2183	2562

All ratings are based on 125 °F condensing temp. 95 °F entering air temp. At sea level.

PHYSICAL DATA									
MODEL	PROPELLER FAN PERFORMANCE				COIL*			REFRIGERANT** CAPACITY R-22	
	NO.	DIAMETER INCH	RPM	TOTAL CFM	NO.	ROWS DEEP	FACE AREA ft^2	CHARGE kg	PUMP DOWN kg
OACC-045	1	24	950	3400	1	3	7	3	9
OACC-085	1	30	950	7200	1	3	12	5	15
OACC-120	2	30	950	10800	1	3	18	7	22
OACC-180	3	30	950	14400	1	3	24	9	32
OACC-250	3	30	950	21900	1	3	36	13	47
OACC-350	4	30	950	28800	2	3	47	18	61
OACC-450	5	30	950	36000	2	3	59	22	73
OACC-550	6	30	950	43800	2	3	73	27	93
OACC-700	8	30	950	57600	4	3	96	35	123
OACC-850	10	30	950	72000	4	3	121	44	152
OACC-1000	12	30	950	87600	4	3	146	53	187
OACC-1200	12	30	950	84000	4	4	146	70	245

Subject To Modification without notice

Omran Tahvieh Industrial Co.

Heating , Ventilation And Air Conditioning

Packaged Industrial Cooler

Technical Descriptions:

- Industrial forward curve centrifugal fan with several fan speed and motor size based on external static pressure.
- Statically and dynamically balanced fans.
- Fan housing and impeller manufactured by hot dip galvanized steel sheet.
- Non corrosive F.R.P basin.
- Aluminum extruded profile framing with P.V.C corners.
- Hot deep galvanized panels.
- Washable Aluminum filter for Dust .
- Single or three phase electro motor 50 Hertz , Ip54 .
- Up or down or front discharge air delivery.
- As your request straw or cellulose pads would be ordered.
- Polyethylene insulation

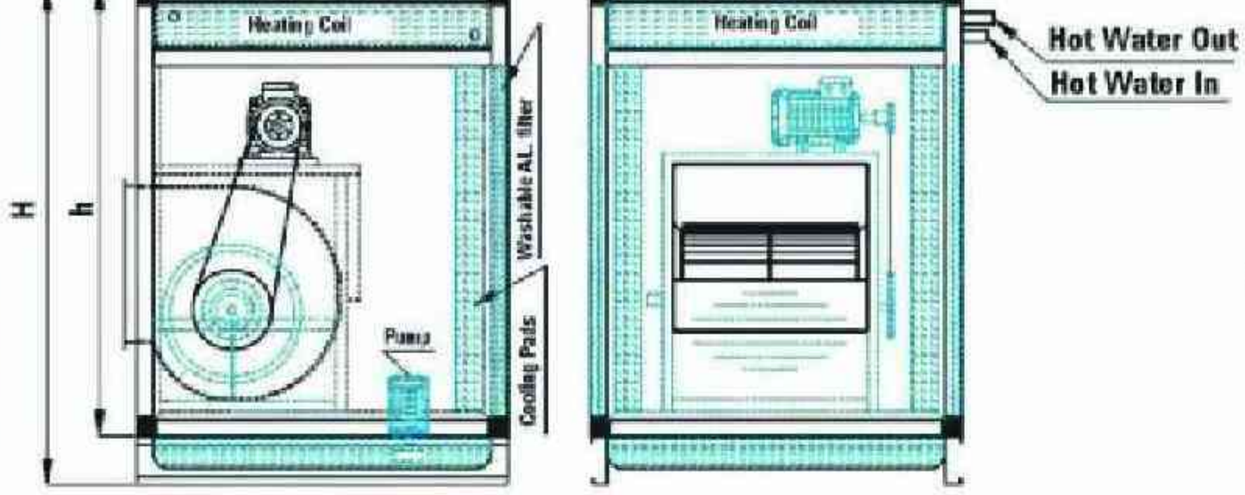

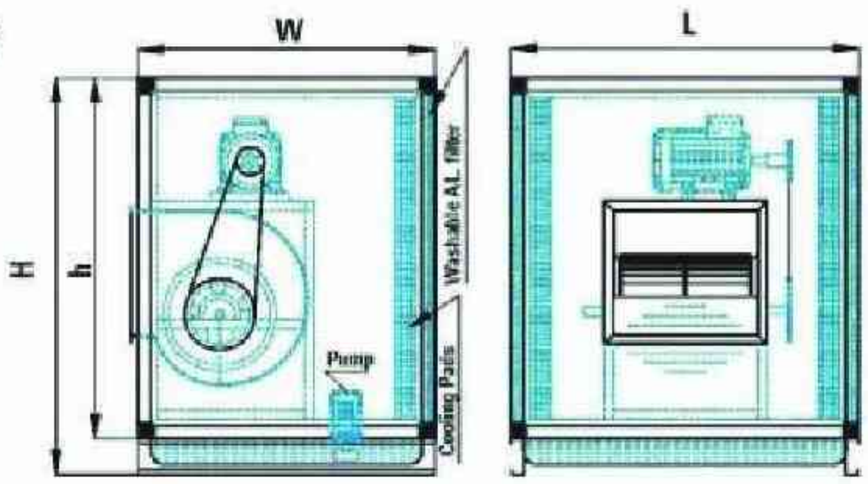

TYPE	MODEL	CAPACITY		FAN	ELECTROMOTOR		DIMENSIONS			CONNECTION	
		AIR FLOW	HEATING	SIZE	POWER	SPEED	LENGHT	WIDTH	HIEGHT	MAKE UP	HEATING COIL
		m^3/hr	Btu/hr	In.	HP	RPM	mm	mm	mm	In.	In.
A	OEC-7000	7000	-	12-12	1	1400	1000	1000	940	3/8	-
	OEC-10000	10000	-	15-15	1.5		1150	1000	1090	3/8	-
	OEC-15000	15000	-	18-13	3		1150	1150	1390	1/2	-
	OEC-20000	20000	-	18-18	4		1350	1150	1540	1/2	-
B	OECH1-7000	7000	80000	12-12	1	1400	1000	1000	1190	3/8	1
	OECH1-10000	10000	120000	15-15	1.5		1150	1000	1340	3/8	1
	OECH1-15000	15000	160000	18-13	3		1150	1150	1640	1/2	1 ¼
	OECH1-20000	20000	220000	18-18	4		1350	1150	1790	1/2	1 ¼
C	OECH2-7000	7000	162000	12-12	1	1400	1000	1000	1190	3/8	1
	OECH2-10000	10000	240000	15-15	1.5		1150	1000	1340	3/8	1
	OECH2-15000	15000	320000	18-13	3		1150	1150	1640	1/2	1 ¼
	OECH2-20000	20000	440000	18-18	4		1350	1150	1790	1/2	1 ¼

NOTICE:

"A" Type is industrial cooler without heating coil and "B"Type industrial cooler with one Row heating coil and "C" Type with Tow Row heating coil. As your request industrial cooler with other capacities would be singed and ordered.

Subject To Modification without notice

ISHRAI SATSA Member

OADF Direct Drive Dry Type Fluid Coolers

Air Cooled Models from 200 MBH to 2,000 MBH
One to Six fan Units Glycol Selection

- Heavy gauge galvanized steel casing with zinc plated nuts and bolts
- Die - formed legs
- High efficiency coils with aluminum fins hydraulically bonded to copper tubing.
- Direct drive fan motors.
- Motors are weather protected by top end rain shields and shaft moisture slingers.

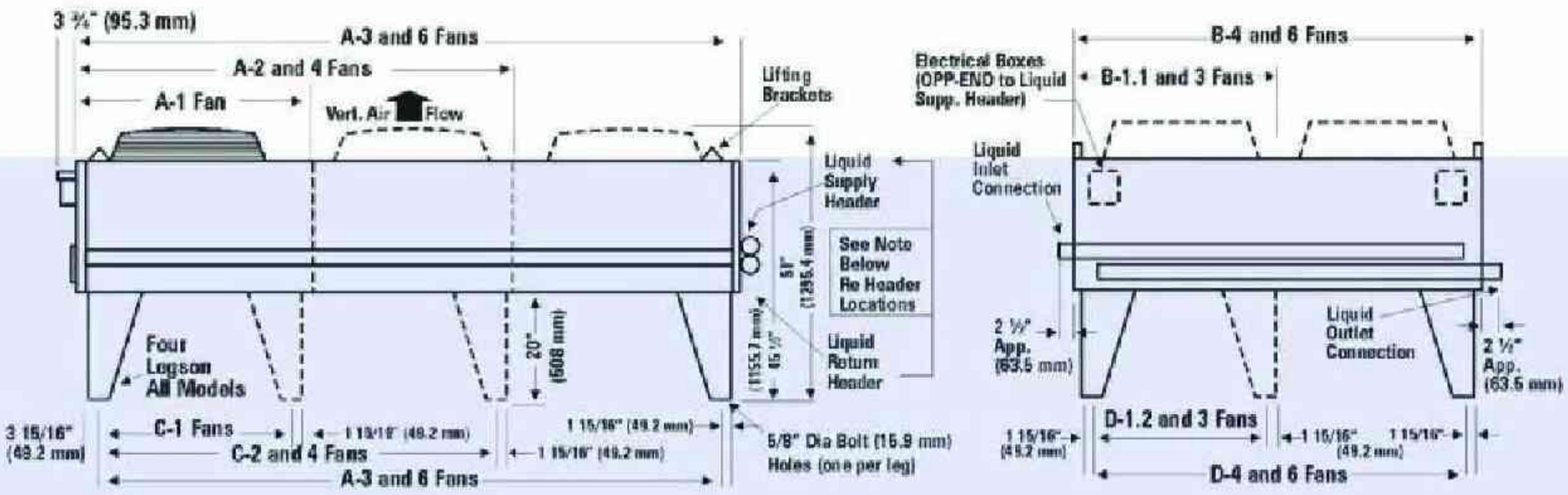

NOTE: Headers can be located at either end of unit.
Whether both supply and return headers are located same end or opposite end depends on coil rows and circuiting used.

OADF MODEL No.	A		B		C		D		INTERNAL VOLUME		NUMBER OF FACE TUBE ROWS	FAN DATA			SHIPPING WEIGHT	
	Inches	mm	Inches	mm	Inches	mm	Inches	mm	U.S. * GALLONS WATER	LITRES*		NO.	TOTAL CFM	TOTAL M/S	Pounds	Kg
1039	43	1092	48 1/8	1222	36	914	41 1/8	1045	3 1/2	13.3	30	1	7370	3.48	320	145
1052	43	1092	48 1/8	1222	36	914	41 1/8	1045	4 1/2	17.0	30	1	7050	3.33	355	161
1060	50	1270	48 1/8	1222	43	1092	41 1/8	1045	5 1/2	20.8	30	1	7380	3.48	390	177
1075	50	1270	48 1/8	1222	43	1092	41 1/8	1045	6 1/2	24.6	30	1	7150	3.37	430	195
2075	83 1/8	2111	48 1/8	1222	76 1/8	1934	41 1/8	1045	6	22.7	30	2	14740	6.96	580	263
2100	83 1/8	2111	48 1/8	1222	76 1/8	1934	41 1/8	1045	8	30.3	30	2	14100	6.65	645	293
2120	97 1/8	2467	48 1/8	1222	90 1/8	2289	41 1/8	1045	10	37.9	30	2	14760	6.97	725	329
2150	97 1/8	2467	48 1/8	1222	90 1/8	2289	41 1/8	1045	12	45.4	30	2	14300	6.75	800	363
3114	123 ¼	3131	48 1/8	1222	116 1/4	2953	41 1/8	1045	9	34.0	30	3	22110	10.43	870	395
3152	123 ¼	3131	48 1/8	1222	116 1/4	2953	41 1/8	1045	12	45.4	30	3	21150	9.98	965	438
3180	144 ¼	3664	48 1/8	1222	137 1/4	3483	41 1/8	1045	14 1/2	54.9	30	3	22140	10.45	1080	490
3225	144 ¼	3664	48 1/8	1222	137 1/4	3483	41 1/8	1045	18	68.1	30	3	21450	10.12	1200	544
4150	83 1/8	2111	93 1/8	2365	76 1/8	1934	86 1/8	2188	12 1/2	47.3	60	4	29480	13.91	1075	488
4200	83 1/8	2111	93 1/8	2365	76 1/8	1934	86 1/8	2188	16 1/2	62.3	60	4	28200	13.31	1200	544
4240	97 1/8	2467	93 1/8	2365	90 1/8	2289	86 1/8	2188	19 1/2	73.8	60	4	29520	13.93	1340	608
4300	97 1/8	2467	93 1/8	2365	90 1/8	2289	86 1/8	2188	24	91.0	60	4	28600	13.5	1500	680
6225	123 ¼	3131	93 1/8	2365	116 1/4	2953	86 1/8	2188	18	68.1	60	6	44220	20.87	1600	726
6300	123 ¼	3131	93 1/8	2365	116 1/4	2953	86 1/8	2188	24	91.0	60	6	42300	19.96	1850	839
6360	144 ¼	3664	93 1/8	2365	137 1/4	3483	86 1/8	2188	29	109.8	60	6	44280	20.9	2000	907
6450	144 ¼	3664	93 1/8	2365	137 1/4	3483	86 1/8	2188	36	136.3	60	6	42900	20.25	2200	998

*** Headers not included. Motors are available for 208-230/1/60-1 HP, 208-230/3/60 - 1 1/3 HP, 575/3/60 - 1 ¼ HP, 380/3/50 -1 ½ HP Contact OMRAN Refrigeration for special requirements.**

Subject To Modification without notice

Packaged Industrial Cooler-Heater(Indirect Fire)

Technical Descriptions:

- Industrial forward curve centrifugal fan with several fan speed and motor size based on external static pressure.
- Statically balanced fans.
- Fan housing and impeller manufactured by hot dip galvanized steel sheet.
- Non corrosive F.R.P basin.
- Aluminum extruded profile framing with P.V.C corners.
- Hot deep galvanized panels.
- Washable Aluminum filter for Dust.
- Single or three phase electro motor 50 Hertz, IP54, Up or down or front discharge air delivery As your request, straw or cellulose pads would be ordered.
- Polyethylene insulation.
- Indirect-fire heater type.
- Oil or gas burner.

TYPE	INDIRECT FIRE TYPE	CAPACITY		FAN	ELECTRO MOTOR		DIMENSIONS			CONECTION	
		Air Flow	Heating	Size	Power	Speed	Length	Width	Height	Make Up	Heating Coil
		m³/hr	BTU/hr	in	HP	RPM	mm	mm	mm	in	in
D	OECIND-7000	7000	170000	12-12	1	1400	1000	1750	1190	3/8	1
	OECIND-10000	10000	250000	15-15	1.5		1150	1750	1340	3/8	1
	OECIND-15000	15000	320000	18-13	3		1150	1900	1640	1/2	1 ¼
	OECIND-20000	20000	440000	18-18	4		1350	1900	1790	1/2	1 ¼

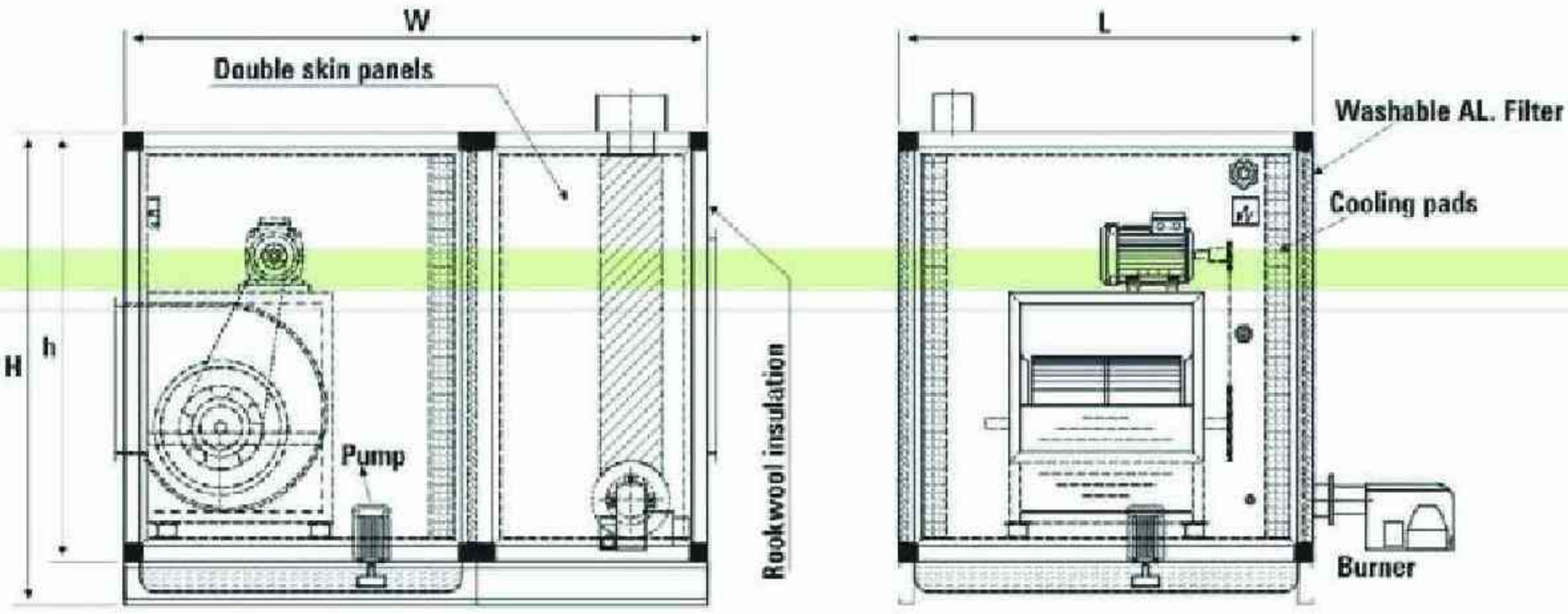

Subject To Modification without notice

ISHRAI SATSA Member

ZENT (OZ Series)

Advantages of Omran Tahvieh Zents:

- Elimination of room radiators: Saving serviceable area.
- Elimination of horizontal supply and return piping: Saving of initial cost and future maintenance.
- Simple maintenance: No need for specialist service - man.
- Increasing the height of unit and decreasing the sur face are: Less occupation area.
- Adjustable summer and winter damper: Easy to change cooling - heating system and possibility of humidification in winter.
- Low noise fan.
- Washable Aluminum filters: Clean air and high efficiency of heating coil.
- Mounted coil inside the unit: Higher heating efficiency, protecting the coil from damage.
- Bypass valve: Control of humidity.
- Fiber glass (FRP) basin: Long life of unit.
- (OPB) opposed blade damper.
- Aluminium profile frame.

COMMERCIAL HEAVY DUTY ZENT SPECIFICATION

MODEL	CAPACITY		FAN	OUTLET DIMENSION	ELECTRO- MOTOR			T.S PRESSURE	DIMENSIONS			CONNECTION		APPROX-WEIGHT	
	AIR FLOW	HEATING	∅	a`b	POWER	SPEED	PHASE	Ht	LENGHT	WIDTH	HIEGHT	COIL	FLOATER	SHIPPING	OPERATING
	Cfm	Btu/hr	In.	Cm	HP	RPM	NO.	Mm-H,0	cm			Inches		Kg	
OZ 15-50-CM-HD	1500	50000			½	1400/900	SINGLE	19						180	290
OZ 20-70-CM-HD	2000	70000	12	34.5×40	¾			21	90	70	190	1	3/8	182	292
OZ 27-75-CM-HD	2700	75000			¾			23						185	295
OZ 32-85-CM-HD	3200	85000			¾			19						220	320
OZ 45-140-CM-HD	4500	140000	15	40×37.5	1 ½			23	110	85	210	1	3/8	225	325
OZ 60-160-CM-HD	6000	160000			3			20						230	330
OZ 70-190-CM-HD	7000	190000			3			20						460	660
OZ 80-230-CM-HD	8000	230000	20	63×63	3			25	172	120	255	1 ¼	½	465	665
OZ 90-280-CM-HD	9000	280000			4			27						470	670
OZ 100-320-CM-HD	10000	320000			5 ½	1400	THREE	30						545	785
OZ 120-360-CM-HD	12000	360000	22	67.5×67.5	5 ½			31	172	120	270	1 ¼	½	550	790
OZ 140-400-CM-HD	14000	400000			7 ½			35						555	795
OZ 160-440-CM-HD	16000	440000			7 ½			35						645	960
OZ 175-470-CM-HD	17500	470000	25	80×80	10			40	300	140	195	1 ½	½	655	970
OZ 190-500-CM-HD	19000	500000			10			42						660	975
OZ 200-570-CM-HD	20000	570000			15			40						790	1200
OZ 215-600-CM-HD	21500	600000	28	87×87	15			45	330	150	215	1 ½	¾	792	1202
OZ 230-700-CM-HD	23000	700000			15			50						796	1205
OZ 240-730-CM-HD	24000	730000			15			50						900	1400
OZ 250-750-CM-HD	25000	750000	30	94×87	15			55	360	150	231	1 ½	¾	905	1405
OZ 260-800-CM-HD	26000	800000			20			60						915	1415

Subject To Modification without notice

Omran Tahvieh Industrial Co.

Heating , Ventilation And Air Conditioning

OACF Centrifugal Air Cooled Condensers

Galvanized steel, angular steel cabinet construction Removable access panels Galvanized steel fan housings and wheels. Fan wheels keyed to fan shaft. Belt drive fan motors.
Weather protected motors with top end rain shields and shaft moisture slingers. High efficiency aluminum or copper fin coils Adjustable motor bases and drives.

OACF MODEL No.	R-22 TOTAL HEAT REJECTION (BTU/HR)					
	°F. (°C) TEMPERATURE DIFFERENCE = CONDENSING TEMPERATURE MINUS AMBIENT TEMPERATURE					
	1(.6)	10(6)	15(8)	20(11)	25(14)	30(17)
103	1800	18000	27000	36000	45000	54000
104	2730	27300	41000	54600	68300	82000
106	3900	39000	58500	78000	97500	117000
108	5200	52000	78000	104000	130000	156000
111	6930	69300	104000	138600	173300	208000
214	8860	88600	133000	177300	221600	266000
217	10500	105000	157500	210000	262500	315000
222	13030	130300	195500	260600	325800	391000
228	16360	163600	245500	327300	409100	491000
237	21460	214600	321900	429200	536600	643800
141	25200	252000	378000	504000	630000	756000
150	28980	289800	434700	579600	724500	869400
164	36580	365800	548700	731600	914500	1097400

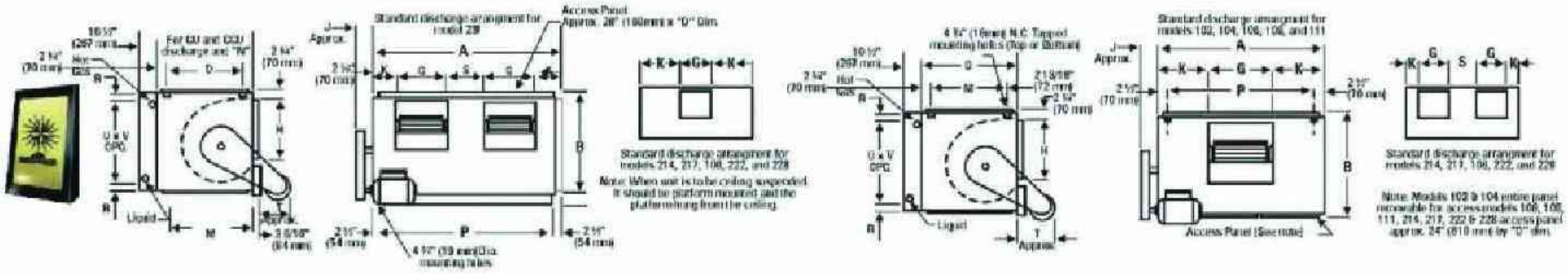

MODEL NO. OACF		A	B	D	G	H	J	K	M	N	P	R	S	T	U	V	No. of FACE TUBES	REFRIGERANT* CHARGE 6 ROW COIL R-12 Lbs.	R-12 Kg.	R-22 Lbs.	R-22 Kg.	SHIPPING WEIGHT Lbs.	Kg.
103	ins	34	22 3/4	21 3/4	11 3/4	10 1/4	6 ½	11 1/8	16 1/8	-	28 1/2	1 1/2	-	15	18	30	12	3.31	1.50	2.98	1.35	343	156
	mm	864	578	553	299	260	165	283	410	-	724	38	-	381	457	762							
104	ins	40	25 3/4	24 3/4	12 1/4	13 1/2	6 ½	13 7/8	19 1/8	-	34 1/2	1 1/2	-	15	21	36	14	4.50	2.04	4.05	1.84	431	196
	mm	1016	654	628	311	343	165	352	486	-	876	38	-	381	533	914							
106	ins	50	29	28	17 1/4	15 7/8	6 1/2	16 3/8	22 3/8	-	44 1/2	1 1/2	-	16	24	45	16	5.95	2.69	5.27	2.39	600	272
	mm	1270	737	711	438	403	165	416	568	-	1130	38	-	406	610	1143							
108	ins	48	37 3/4	36 3/4	21 1/8	19 3/8	8	13 3/8	31 1/8	-	42 1/2	1 1/2	-	18	33	44	22	7.88	3.58	7.09	3.22	806	366
	mm	1219	959	934	537	492	203	340	791	-	1080	38	-	457	838	1118							
111	ins	63	37 3/4	36 3/4	23 1/4	21 5/8	8	19 7/8	31 1/8	-	57 1/2	1 1/2	-	18	33	58	22	10.28	4.67	9.25	4.20	996	452
	mm	1600	959	934	591	549	203	505	791	-	1461	38	-	457	838	1473							
214	ins	78	37 3/4	36 3/4	19	17 7/8	8	10	31 1/8	-	72 1/2	1 1/2	20	21	33	74	22	13.62	6.91	11.72	5.32	1171	531
	mm	1981	959	934	483	454	203	254	791	-	1842	38	508	533	838	1880							
217	ins	93	37 3/4	36 3/4	21 1/8	19 3/8	8	12 3/4	31 1/8	-	87 1/2	1 1/2	25 3/8	21	33	88	22	14.20	6.45	12.90	5.86	1393	632
	mm	2362	959	934	537	492	203	324	791	-	2223	38	645	533	838	2235							
222	ins	97	44 3/4	43 3/4	23 1/4	21 5/8	9	12 5/8	38 1/8	-	91 1/2	2	25 1/4	21	39	92	26	17.46	7.93	15.86	7.20	1714	778
	mm	2464	1137	1111	591	549	229	321	968	-	2324	51	641	533	991	2337							
228	ins	120	44 3/4	43 3/4	28 1/4	26 1/2	9	15 7/8	38 1/8	-	114 1/2	2	31 3/4	23	39	116	26	21.55	9.78	19.59	8.89	2163	981
	mm	3048	1137	1111	718	673	229	403	968	-	2908	51	807	584	991	2946							
237	ins	122 1/8	57 3/8	45 5/8	31 1/2	28 3/4	11 1/2	15 1/8	39 1/2	11 3/4	117 7/8	2	29	25	51	116	34	28.72	13.04	26.10	11.85	3420	1551
	mm	3102	1457	1159	800	730	292	384	1003	299	2994	51	737	635	1295	2946							
141	ins	122 1/8	65 5/8	59 1/8	46 3/8	43 1/4	11 1/2	37 7/8	53	6 1/2	117 7/8	1 3/4	-	25	60	116	40	34.29	15.57	31.15	14.14	3500	1588
	mm	3102	1667	1502	1178	1099	292	962	1346	165	2994	45	-	635	1524	2946							
150	ins	122 1/8	75 3/8	66 5/8	51 1/2	47 1/4	11 1/2	35 7/8	60 1/2	8 3/4	117 7/8	2	-	25	69	116	46	41.28	18.74	38.05	17.27	4500	2041
	mm	3102	1915	1692	1308	1200	292	899	1537	222	2994	51	-	635	1753	2946							
164	ins	122 1/8	93 3/8	72 5/8	56 3/4	52 3/8	11 1/2	32 5/8	66 1/2	20 3/4	117 7/8	2	-	25	87	116	58	53.31	24.20	47.98	21.78	5900	2676
	mm	3102	2372	1845	1442	1330	292	829	1689	527	2994	51	-	635	2210	2946							

* For R502 multiply charge in lbs. By 0.93 and for R500 by 0.88. For winter charge, multiply by 6.65.
** For filter section dimensions refer to page 7.

Subject To Modification without notice

ISHRAI SATSA Member

Class O - 160

Class 0-160 Tower Advantage

Long Service Life. We've carefully chosen all the materials used in Class 0-160 towers for their corrosion resistance and suitability for Cooling tower service. Pressure - treated lumber heavy - galvanized Steel stainless steel PVC and fiberglass keep your Class 160 tower working year after year.

Efficient Field Assembly. Precise factory fabrication assures That every component in your Class 160 tower will fit as designed. And OMRAN offers an unparalleled nationwide construction organization To build your tower quickly and economically .

Easy Maintenance Access. The Class 0 -160 s cross flow design Gives you quick direct access to the open distribution basins plenum And mechanical components for regular inspection and service.

Low Operating Costs. OMRAN's high - efficiency fill and fans gravity-flow water distribution and efficient Geareducer drive work together to offer maximum cooling with minimum power use.

Low Maintenance Costs. Induced - draft propeller fans on OMRAN right angle Geareducer units TEFC 1.15 service factor motors and heavy duty mechanical equipment supports assure long service life with minimal maintenance.

All-Season Reliability. Class 0 - 160 towers perform as specified in the heat of summer. They respond well to energy management Techniques in the spring and fall.
They operate virtually ice-free in the dead of winter. And they offer simple maintenance all year long.

Construction and Components

■ Fill/Louvers/Drift Eliminators

OMRAN high - perfomance film fill is the heart of every Class 0 - 160 tower. A repeating chevron pattern provides the wetted surface and air Turbulence necessary for proper heat transfer while minimizing Resistance to airflow so you'll save on fan power. Molded protrusions On each fill sheet assure uniform spacing.

■ Mechanical Equipment

The OMRAN Geareduer speed reducer used in the Class 0 - 160 line 0 - 160 line contributes a long record of dependability long service life. And low maintenance. We run-in every Geareducer unit under load prior to shipment to Make sure that it will operate properly on your tower. Class 0 - 160 towers offer the benefits of adjustable pitch propeller type fans. Blades are adjustable in pitch so you can take full advantage of rated Horsepower or adjust the pitch to compensate for unusual job site restrictions. The true airfoil blades designed.
Specifically for cooling towers offer efficient quiet operation and long Service life.
Fans operate inside structural FRP (fiber - reinforced polyester) eased - inlet Fan cylinders designed and applied to maximize fan performance. Standard cylinder heights are 6-0" To 7-0" depending on fan diameter. 10-0" cylinders are available as an option. Minimizing air flow restrictions and reducing air turbulence in the fan entrance region.

■ Water Distribution System

The gravity - flow water distribution system designed into the Class 0 - 16 tower essentially reduces pump head to its Most basic component - static life - saving you money on pump power. You wont have to force water through internal piping and pressure spray nozzles as you would in a counter flow tower.

■ Structure and Materials

Wind load criterion is normally 30 pounds per square foot of projected area and the design meets criteria for UBC Zone 1 Seismic loading based on a maximum water temperature.

■ Access and Safety

A 3 - 6 high guardrail system complete with top rails inter - mediate rails And toe boards surrounds the entire top perimeter of the tower. Aluminum ladders attached to the tower end walls provide access to the fan deck level. Ladders begin at the cold water basin level and end at the top of the guardrail around the fan deck. Each tower normally includes two ladders-one at each end wall.

■ Casing

Tower end walls are cased with gray 8 oz/sq ft ribbed FRP Sheets. Water and corrosion-proof FRP is immune to biological deterioration and requires no maintenance.

■ Cold Water Basin

Most Class 160 owners install their towers over concrete cold water basins provided by others-or you can choose a wood collection basin as an option.

Subject To Modification without notice

Packaged Semi-Industrial Cooler

Technical Descriptions:

- FRP Casing and basin
- Anti Corrosive
- Anti U.V.
- Initial Insulation
- Special design
- Heating System (optional)
- Special Painting
- High Performance
- Low Water Consumption
- Special Bases
- Hybrid Applicable
- Anti Corrosive Coated Blower
- FRP Housing (optional)
- Aerodynamic Casing
- Portable (optional)

OECC 1

OECC 1

OECU 1

OECU 1

OECC 2

OECC 2

OECC 3

OECU 2

OECU 2

OECW

OECW

Subject To Modification without notice

ISHRAI SATSA Member

Air Washer Cleaner Cooler

Technical Descriptions:

- FRP Casing and basin
- Anti Corrosive
- Anti U.V.
- Initial Insulation
- Lovely and special design
- Lovely and special paint
- High performance
- Cellulose evaporative pads
- Low water consumption
- Heating system (Optional)
- Hybrid applicable
- Roll special filter
- Flexible duct connector

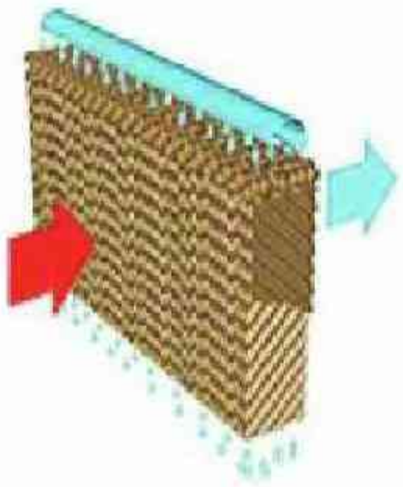

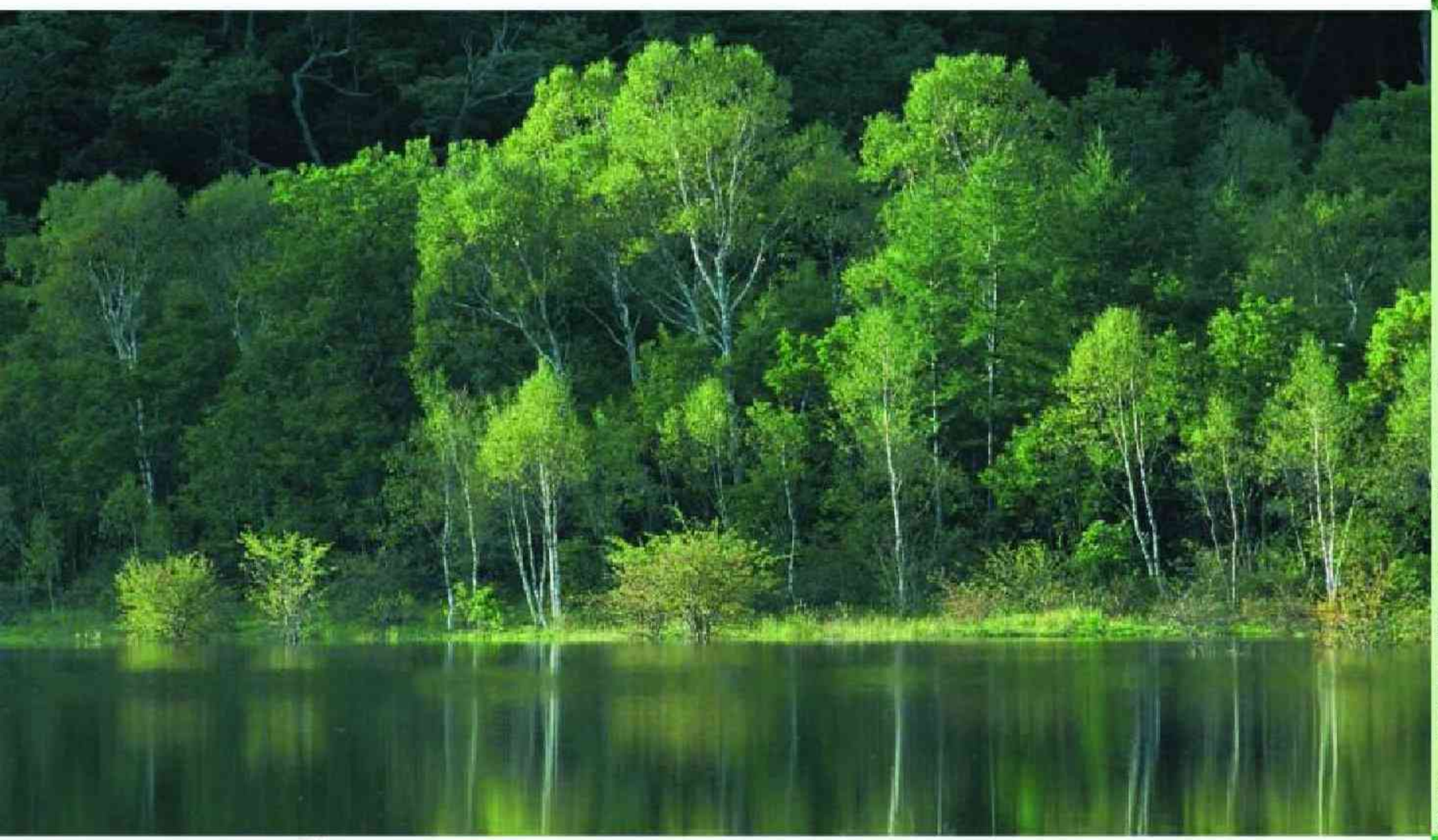

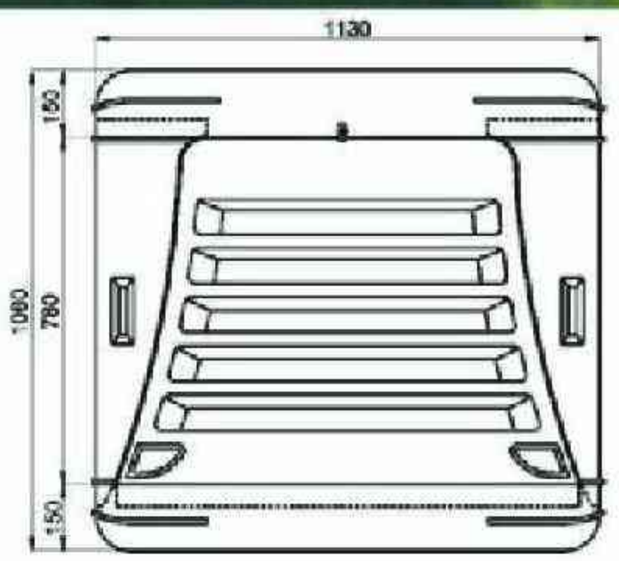

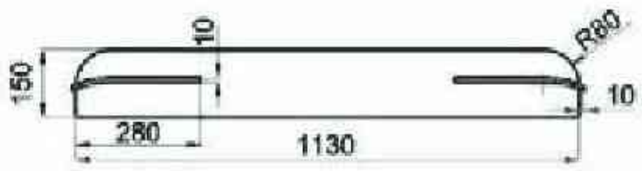

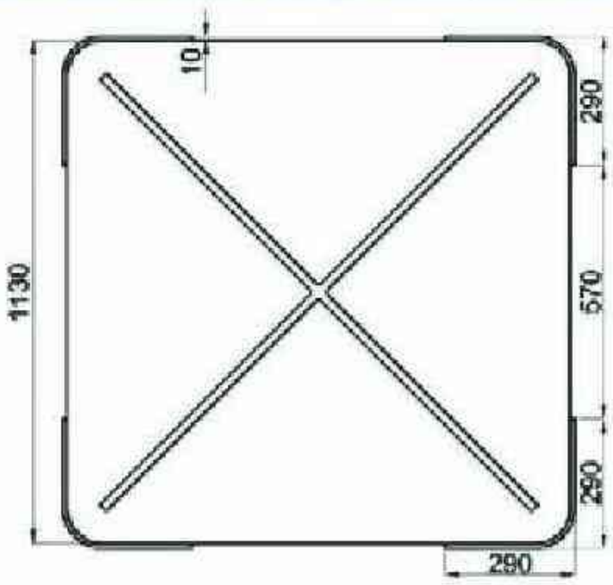

Subject To Modification without notice

Air Curtain (OR4 Series)

Industrial doors must be allowed to open and close as long as is required to let people and transport in and out. This is sufficient to lower the internal temperature by several degrees and to increase the amount of time the heating system is running. In order to prevent heat loss, energy waste and subsequently avoiding thermal changes which can affect personnel and result in higher running costs Omran has created the OR4 Air Barrier which greatly reduces heat loss through the door openings.

The OR4 operation is as simple as it is ingenious. It consists of a powerful fan, which can be set to operate each time the door is opened. It takes air from the upper area and blows it down over the door opening at high speeds through its long thin nozzle.

This action promotes two fundamental effects. It helps to eliminate heated internal air from escaping to outside and also re - uses the hotter air from the higher area by blowing it back down to the lower working level where it is needed. This results in a double thermal recovery.

CHARACTERISTICS	OR4	OR4S
Air flow	2800 m^3/h	3200 m^3/h
Air output speed	24 m^3/s	26 m^3/s
Noise level at 3m	65 db (A)	65 db (A)
Max.installation height	4.0-4.5 m	4.5-5.0 m
Power supply	230 v-50 Hz	230 v-50 Hz
Run current	4.4 A	4.4 A
Power consumption	550 w	550 w

With the aim of continuously improving the quality of our products, Omran reserves the right to vary above data without prior notice

Subject To Modification without notice

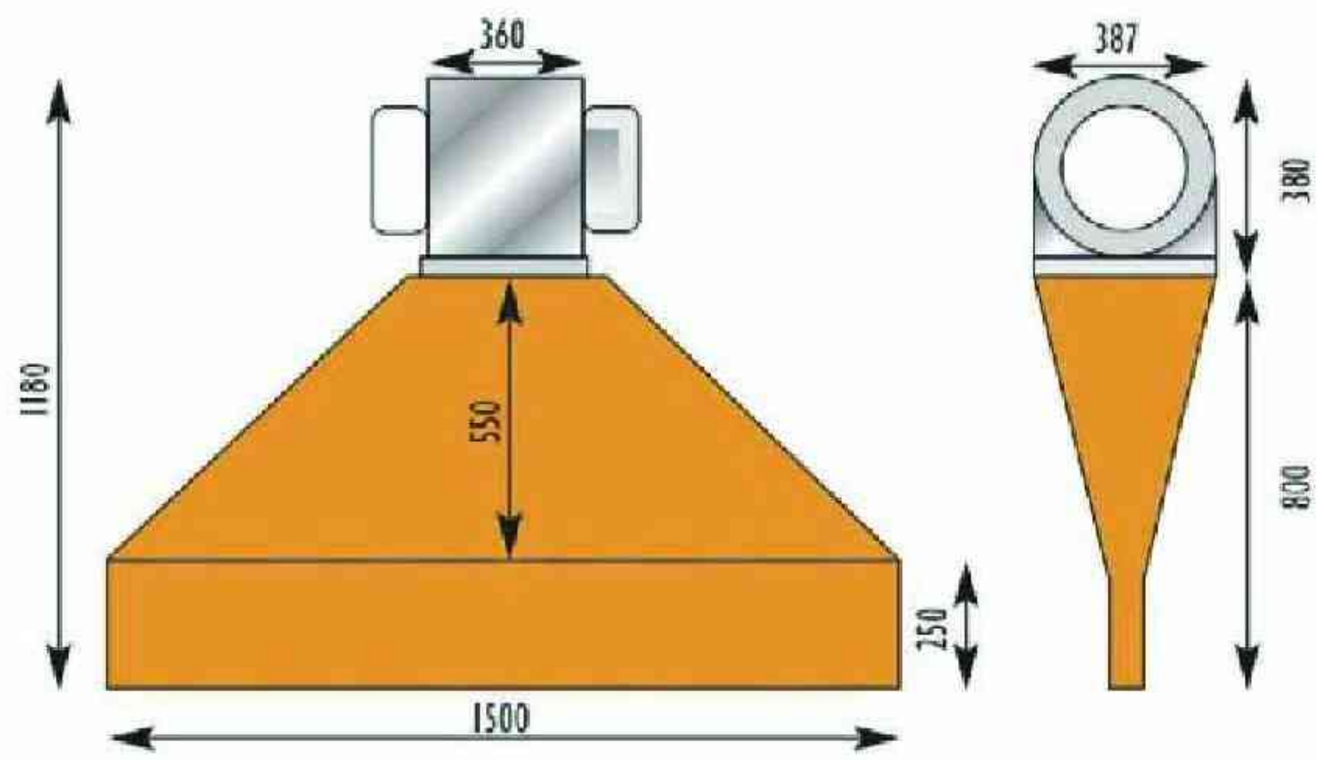

ISHRAI SATSA Member

OVTL - Open Cooling Tower (Low Profile)

General Description

Open Circuit Cooling Towers with centrifugal fans, deliver fully rated thermal performance over a wide range of flow and temperature requirements. This type of cooling towers can be installed indoors and can accommodate limited ceiling or enclosure heights. Cooling tower with centrifugal fans minimize sound levels and installation costs, provides year round operating reliability, and simplifies maintenance requirements.

Cooling Towers provide an answer to the growing need to save water and energy and help protect the environment by providing the highest system efficiency.

Key Features

- Suitable for indoor and outdoor installations
- Suitable for high temperature applications
- Low sound
- Single side air inlet
- Low energy consumption
- Low installed cost
- Easy maintenance
- Reliable year - round operation
- Long service life
- Suitable for locations with limited ceiling or enclosure heights and roof top installations

OVTL 039 G-OVTL 137 M

Model OVTL	Operating Weight (kg)	Shipping Weight	Fan Motor (kW)	Fluid Inlet ND (mm)	Fluid Outlet ND (mm)	Make Up ND (mm)	A (mm)	H (mm)	L1 (mm)	L2 (mm)	W (mm)
OVTL 039-G	1200	720	(1) 2,2	(1) 100	(1) 100	25	75	1560	3350	1820	1250
OVTL 045-H	1230	750	(1) 4,0	(1) 100	(1) 100	25	75	1560	3350	1820	1250
OVTL 052-H	1260	780	(1) 4,0	(1) 100	(1) 100	25	75	1785	3350	1820	1250
OVTL 059-H	1290	810	(1) 4,0	(1) 100	(1) 100	25	75	1990	3350	1820	1250
OVTL 059-J	1310	830	(1) 5,5	(1) 100	(1) 100	25	75	1785	3350	1820	1250
OVTL 066-J	1320	840	(1) 5,5	(1) 100	(1) 100	25	75	1990	3350	1820	1250
OVTL 072-K	1330	850	(1) 7,5	(1) 100	(1) 100	25	75	1990	3350	1820	1250
OVTL 076-J	1720	1010	(1) 5,5	(1) 150	(1) 150	25	105	1990	4560	2730	1250
OVTL 079-K	1410	930	(1) 7,5	(1) 100	(1) 100	25	75	2480	3350	1820	1250
OVTL 082-K	1740	1030	(1) 7,5	(1) 150	(1) 150	25	105	1990	4560	2730	1250
OVTL 086-L	2050	1120	(1) 11,0	(1) 150	(1) 150	25	105	1560	5480	3650	1250
OVTL 094-M	2060	1130	(1) 15,0	(1) 150	(1) 150	25	105	1560	5480	3650	1250
OVTL 095-K	1850	1140	(1) 7,5	(1) 150	(1) 150	25	105	2480	4560	2730	1250
OVTL 103-K	2150	1220	(1) 7,5	(1) 150	(1) 150	25	105	1990	5480	3650	1250
OVTL 116-L	2180	1250	(1) 11,0	(1) 150	(1) 150	25	105	1990	5480	3650	1250
OVTL 126-L	2320	1390	(1) 11,0	(1) 150	(1) 150	25	105	2480	5480	3650	1250
OVTL 126-M	2190	1260	(1) 15,0	(1) 150	(1) 150	25	105	1990	5480	3650	1250
OVTL 137-M	2330	1400	(1) 15,0	(1) 150	(1) 150	25	105	2480	5480	3650	1250

OVTL 139 L - OVTL 272 P

Model OVTL	Operating Weight (kg)	Shipping Weight	Fan Motor (kW)	Fluid Inlet ND (mm)	Fluid Outlet ND (mm)	Make Up ND (mm)	A (mm)	H (mm)	L1 (mm)	L2 (mm)	W (mm)
OVTL 139-L	3000	1560	(1) 11,0	(1) 200	(1) 200	50	130	1560	4560	2730	2400
OVTL 152-M	3010	1570	(1) 15,0	(1) 200	(1) 200	50	130	1560	4560	2730	2400
OVTL 171-L	3100	1670	(1) 11,0	(1) 200	(1) 200	50	130	1990	4560	2730	2400
OVTL 185-M	3170	1740	(1) 15,0	(1) 200	(1) 200	50	130	1990	4560	2730	2400
OVTL 198-N	3190	1760	(1) 18,5	(1) 200	(1) 200	50	130	1990	4560	2730	2400
OVTL 209-O	3200	1770	(1) 22,0	(1) 200	(1) 200	50	130	1990	4560	2730	2400
OVTL 215-N	3380	1950	(1) 18,5	(1) 200	(1) 200	50	130	2480	4560	2730	2400
OVTL 225-O	4000	2080	(1) 22,0	(1) 200	(1) 200	50	130	1990	5480	3650	2400
OVTL 227-O	3400	1970	(1) 22,0	(1) 200	(1) 200	50	130	2480	4560	2730	2400
OVTL 238-N	4110	2210	(1) 18,5	(1) 200	(1) 200	50	130	2480	5480	3650	2400
OVTL 245-P	4080	2180	(1) 30,0	(1) 200	(1) 200	50	130	1990	5480	3650	2400
OVTL 272-P	4310	2410	(1) 30,0	(1) 200	(1) 200	50	130	2480	5480	3650	2400

Subject To Modification without notice

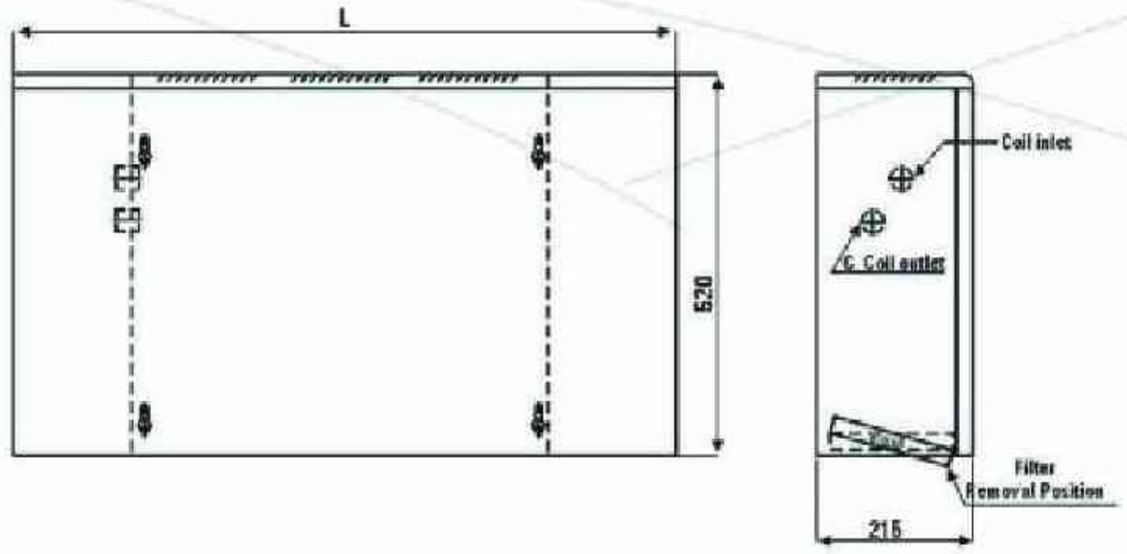

OFC-HE

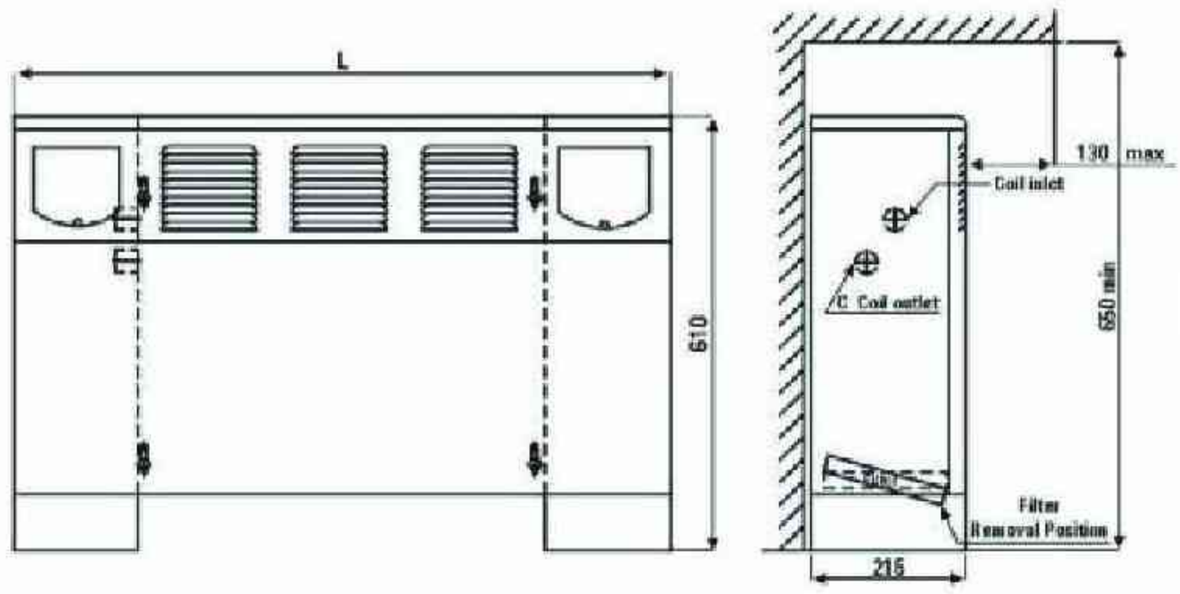

OFC-FE

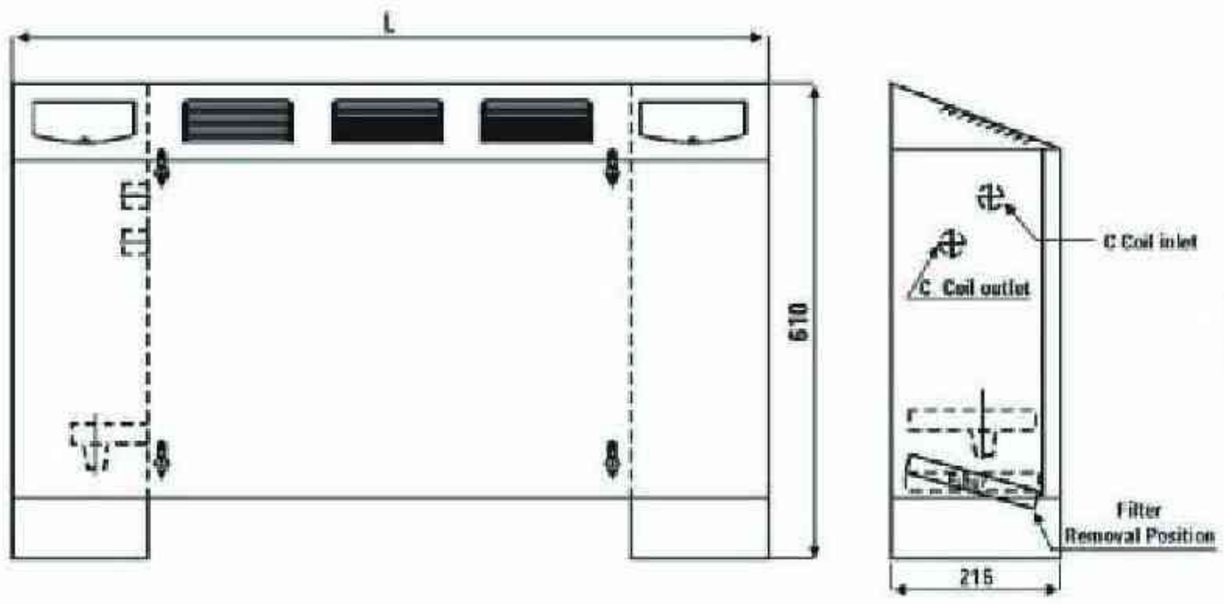

OFC-SE

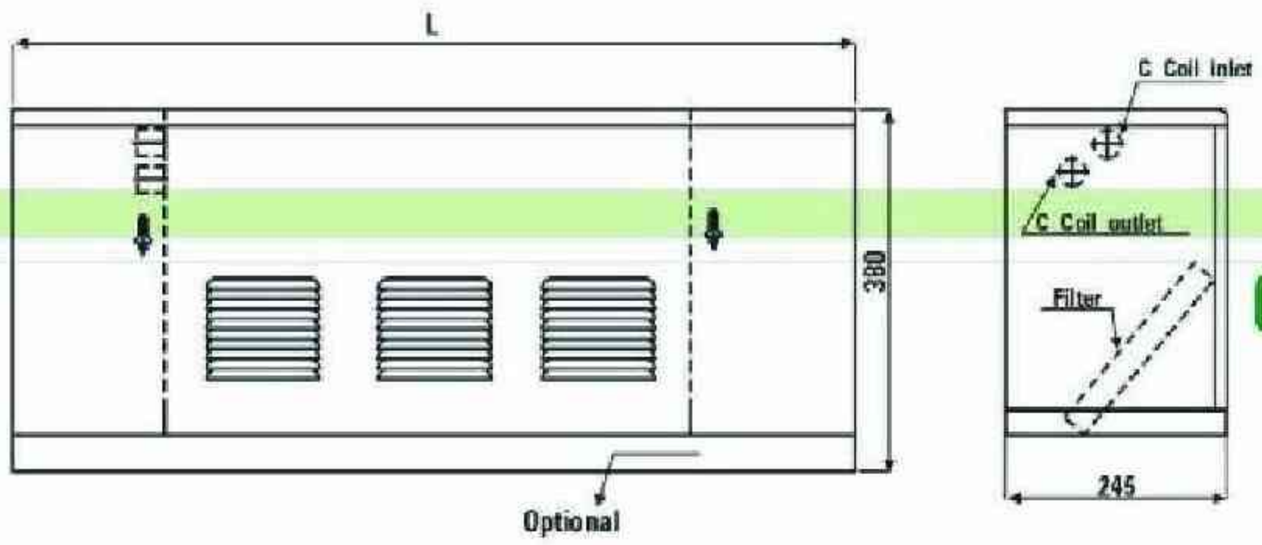

OFC-TL

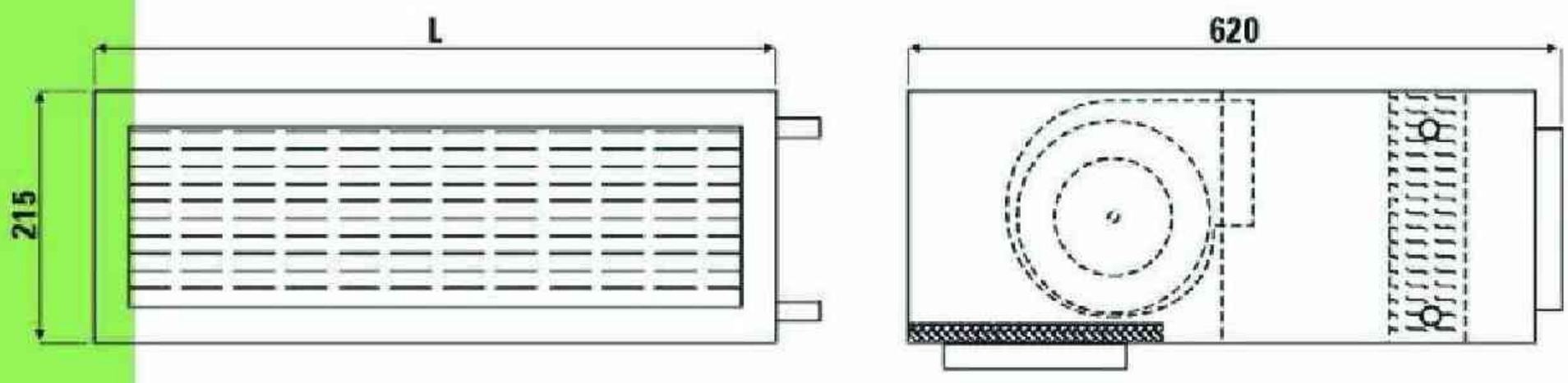

OFC-HC

Subject To Modification without notice

ISHRAI SATSA Member

Classic Fan Coils

SPECIFICATIONS

UNIT CONSTRUCTION

These fan coil unit consists of coil, motor/blower assembly Filter, Multi speed switch, connections and a drain pan securely mounted on heavy gauge steel housing. Exposed fan coil unit's steel sheet panels are pre washing and coated by the powder coating process. Access to the blower assembly is provided through the removable cover from where the complete fan/motor deck can be removed for servicing.

BLOWER ASSEMBLY

The direct drive blower motor assembly is easily accessible for complete servicing after removal of fan deck from the unit. The blower wheels are large in diameter and are of the forward curved design. Constructed of Plastic or Aluminum, they are balanced for quiet and smooth performance.

MOTORS

Motors are permanent split capacitor type with multi speed tapped windings and thermal protector. The bearings are of sleeve type.

COILS

Coils are Multi rows deep and are manufactured from 5/8"OD copper tubing with aluminum fins mechanically bonded to the tubing. Coils are provided with capillary tube for expansion. All coils are factory tested at 300 psig.

DRAIN PAN

The condensate drain pan is fabricated of heavy gauge galvanized steel. The drain pan could coated by FRP (Fiberglass) or zinc - rich coating (optional).

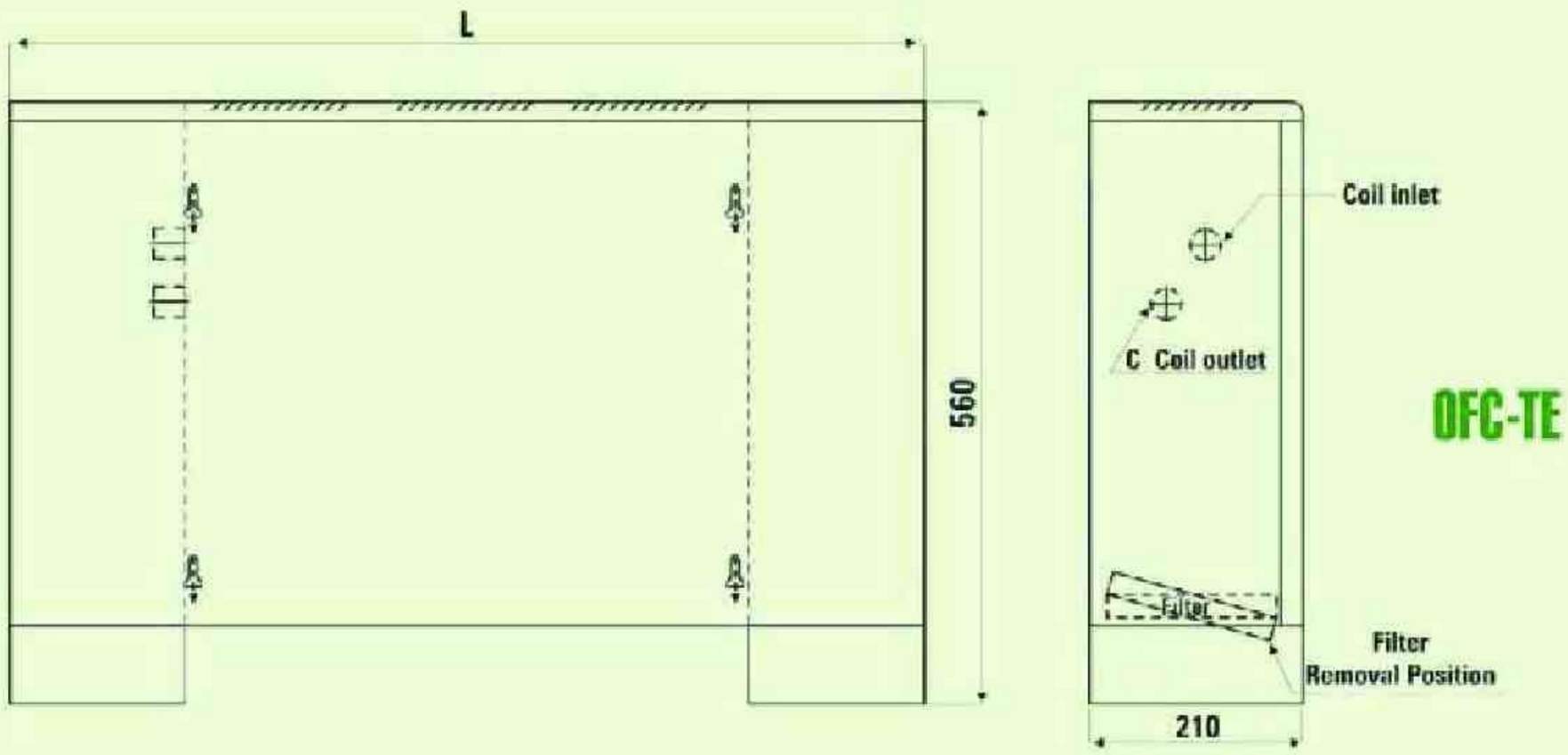

OFC-TE

FAN -COILS MODEL	L (mm)	Conn. Size of coil (in.) NPS	ELECTRO MOTOR		Nominal air flow (cfm)
			No. of motor × nominal power(w)	Approximate high speed (rpm)	
OFC-TE*-02	900	3/4"	1× 30 W	1100	200
OFC-TE*-03	1080	3/4"	1× 30 W	1100	300
OFC-TE*-04	1260	3/4"	1× 30 W	1100	400
OFC-TE*-06	1440	3/4"	1× 30 W	1100	600
OFC-TE*-08	1620	3/4"	2× 30 W	1100	800
OFC-TE*-10	1800	3/4"	2× 30 W	1100	1000
OFC-TE*-12	1980	3/4"	2× 30 W	1100	1200

* TE: Top discharge exposed
FE: Front discharge exposed
SE: Slant top discharge exposed
HE: Horizontal exposed
HC: Horizontal concealed
TL: Lo - Boy

Subject To Modification without notice

Ducted Fan Coils

OMRAN TAHVIEH (ODFC) INCLUDED :

Condensate drain pan is constructed of heavy gauge galvanized sheet metal. The condensate drain outlet is up to ¾ inch O.D.

Farming
Unit frames are fabricated with diecasted corners and Aluminum extruded profiles. Unit frames are completely stable and demountagable.

Casing
Unit casing and panels are single skinned and fabricated with (1.25~1.5mm) wall thickness hot dip galvanized steel gascketed and air-Tightened.

Thermal Insulation
10mm high quality, poly roll thermal and noise and moisture insulator.

Coils
Coils are constructed of 5/8 inch O.D. Copper tubes with waffled and rippled edge aluminum or copper fins mechanically bonded to the tubes. All coils are leak tested with 300 psig air in an illuminated water test tank.

All DX Coils are evacuated and backfilled with 5 psig dry nitrogen to assembly on the units.

Bed Filter
Permanent washable flat type air filter, constructed with Corrugated mesh aluminum expanded sheet.

Fans
The fans are direct driven, centrifugal, forward curved, double width wheels. Blower housings are galvanized steel sheet with specially rolled perimeter welded to add rigidity.

Motors
Motors are variable speed by speed controller, single phase - 50HZ, 220V, IP 55, Fitsch Bach type. (Optional)

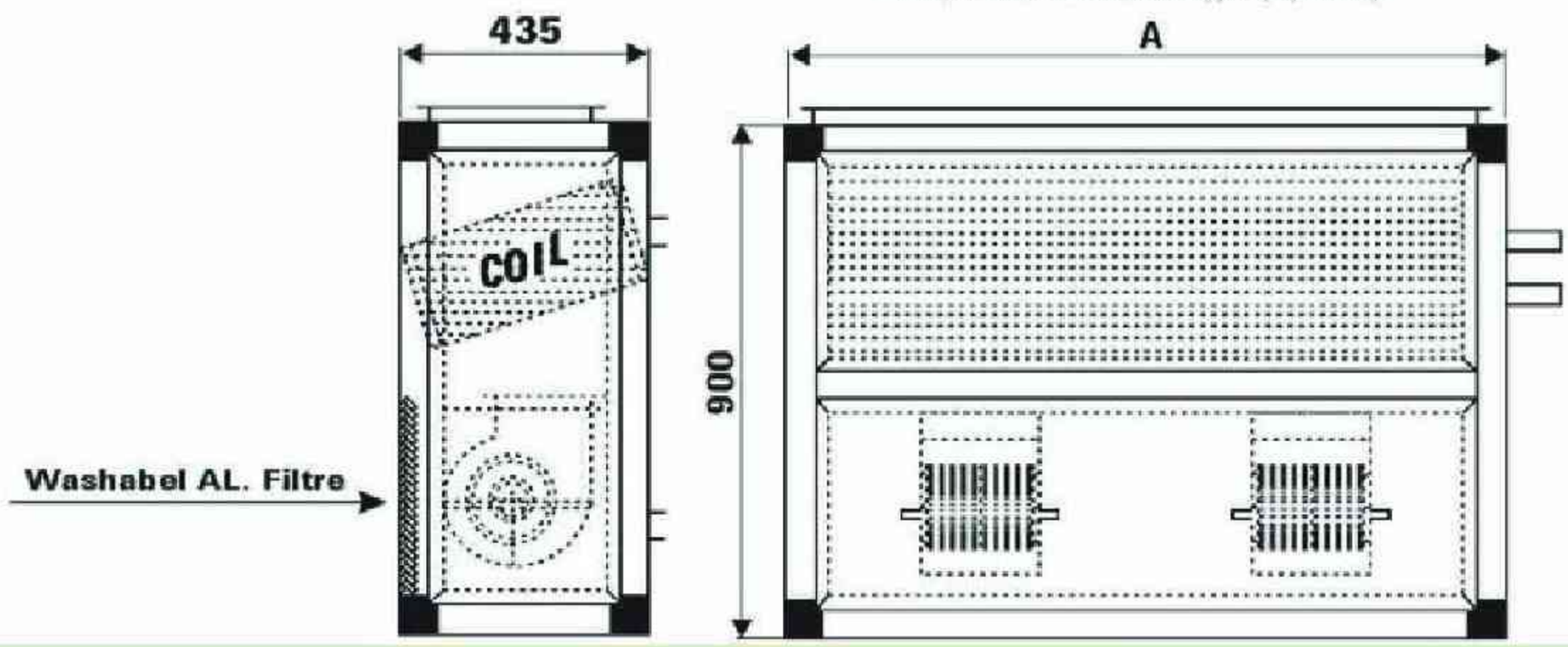

Model	Nominal CFM	A (mm)	Pipe Size (in.)
ODFC-C0600	600	650	3/4
ODFC-C0800	800	760	3/4
ODFC C1000	1000	875	3/4
ODFC-C1200	1200	985	1
ODFC-C1400	1400	1100	1
ODFC-C1600	1600	1210	1
ODFC-C1800	1800	1375	1
ODFC-C2000	2000	1540	1 1/4
ODFC-C2400	2400	1700	1 1/4
ODFC-C2800	2800	1950	1 1/4
ODFC-C3000	3000	2080	1 1/2
ODFC-C3200	3200	2210	1 1/2

Subject To Modification without notice

ISHRAI SATSA Member

Luxury Exposed Fan Coils

SPECIFICATIONS

UNIT CONSTRUCTION

These fan coil unit consists of coil, motor/blower assembly Filter, Multi speed switch, connections and a drain pan securely mounted on heavy gauge steel housing.

Access to the blower assembly is provided through the removable cover from where the complete fan/motor deck can be removed for servicing.

BLOWER ASSEMBLY

The direct drive blower motor assembly is easily accessible for complete servicing after removal of fan deck from the unit. The blower wheels are large in diameter and are of the forward curved design. Constructed of Plastic or Aluminum, they are balanced for quiet and smooth performance.

MOTORS

Motors are permanent split capacitor type with multi speed tapped windings and thermal protector. The bearings are of sleeve type.

COILS

Coils are Multi rows deep and are manufactured from 5/8"OD copper tubing with aluminum fins mechanically bonded to the tubing. All coils are factory tested at 300 psig.

DRAIN PAN

The condensate drain pan is fabricated of heavy gauge galvanized steel. The drain pan could coated by FRP (Fiberglass) or zinc - rich coating (optional).

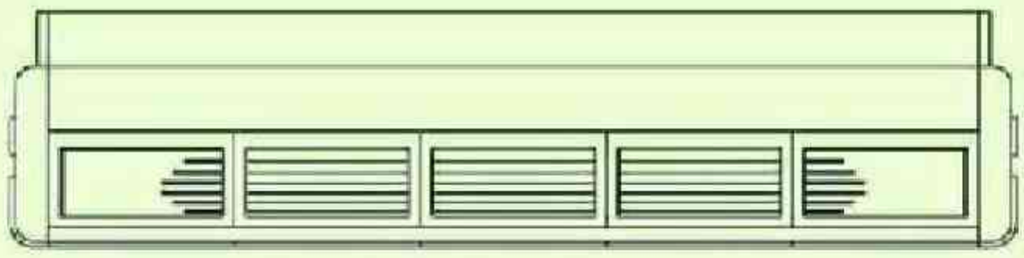

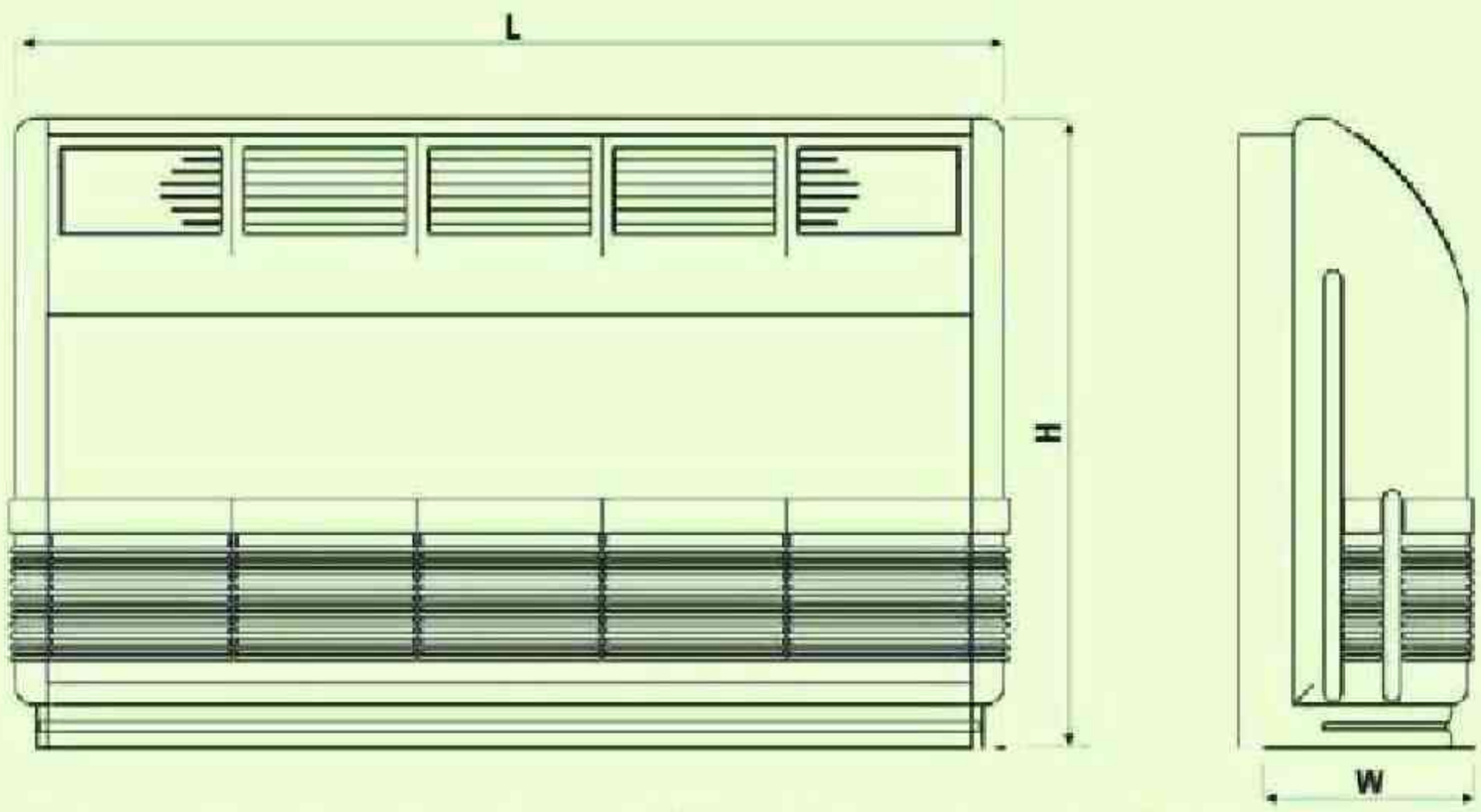

FAN -COILS MODEL	L (mm)	W (mm)	H (mm)	Conn. Size of coil (in.) NPS	ELECTRO MOTOR		Nominal air flow (cfm)
					No. of motor × nominal power(w)	Approximate high speed (rpm)	
OFC-SX-02	955	215	580	3/4"	1× 30 W	1100	200
OFC-SX-03	1135	215	580	3/4"	1× 30 W	1100	300
OFC-SX-04	1315	215	580	3/4"	1× 30 W	1100	400
OFC-SX-06	1495	215	580	3/4"	1× 30 W	1100	600
OFC-SX-08	1675	215	580	3/4"	2× 30 W	1100	800
OFC-SX-10	1855	215	580	3/4"	2× 30 W	1100	1000
OFC-SX-12	2035	215	580	3/4"	2× 30 W	1100	1200

Subject To Modification without notice

Room Air Filter Unit

SPECIFICATIONS

UNIT CONSTRUCTION

These fan coil unit consists of coil, motor/blower assembly Filter, Multi speed switch, connections and a drain pan securely mounted on heavy gauge steel housing.
Access to the blower assembly is provided through the removable cover from where the complete fan/motor deck can be removed for servicing.

BLOWER ASSEMBLY

The direct drive blower motor assembly is easily accessible for complete servicing after removal of fan deck from the unit.
The blower wheels are large in diameter and are of the forward curved design.
Constructed of Plastic or Aluminum, they are balanced for quiet and smooth performance.

MOTORS

Motors are permanent split capacitor type with multi speed tapped windings and thermal protector. The bearings are of sleeve type.

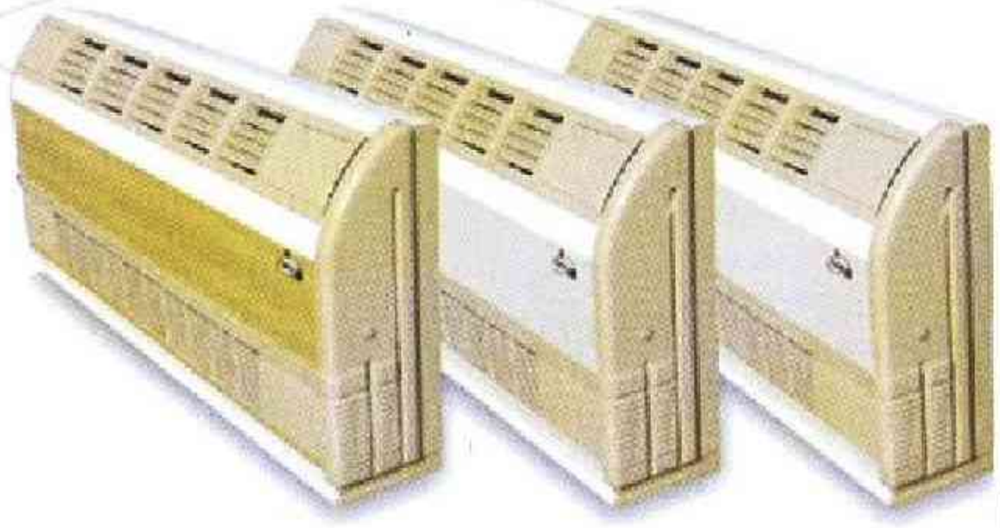

COILS (Optional)

Coils are Multi rows deep and are manufactured from 5/8"OD copper tubing with aluminum fins mechanically bonded to the tubing. All coils are factory tested at 300 psig.

DRAIN PAN

The condensate drain pan is fabricated of heavy gauge galvanized steel.
The drain pan could coated by FRP (Fiberglass) or zinc - rich coating (optional).

FILTER

Room air filter units have a hepa filter with UV03 lamp and have a Aluminum pre filter in air intake too.

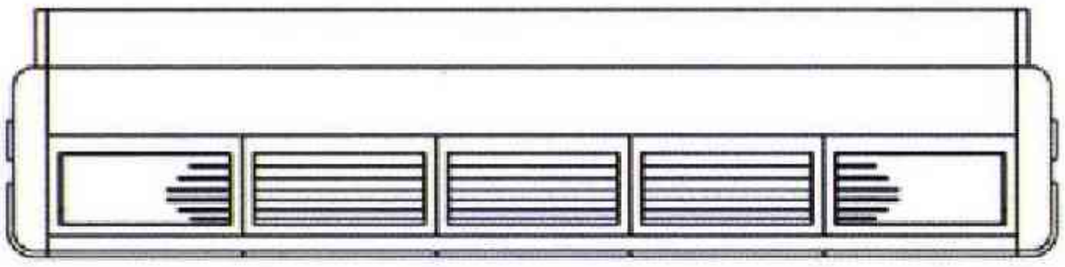

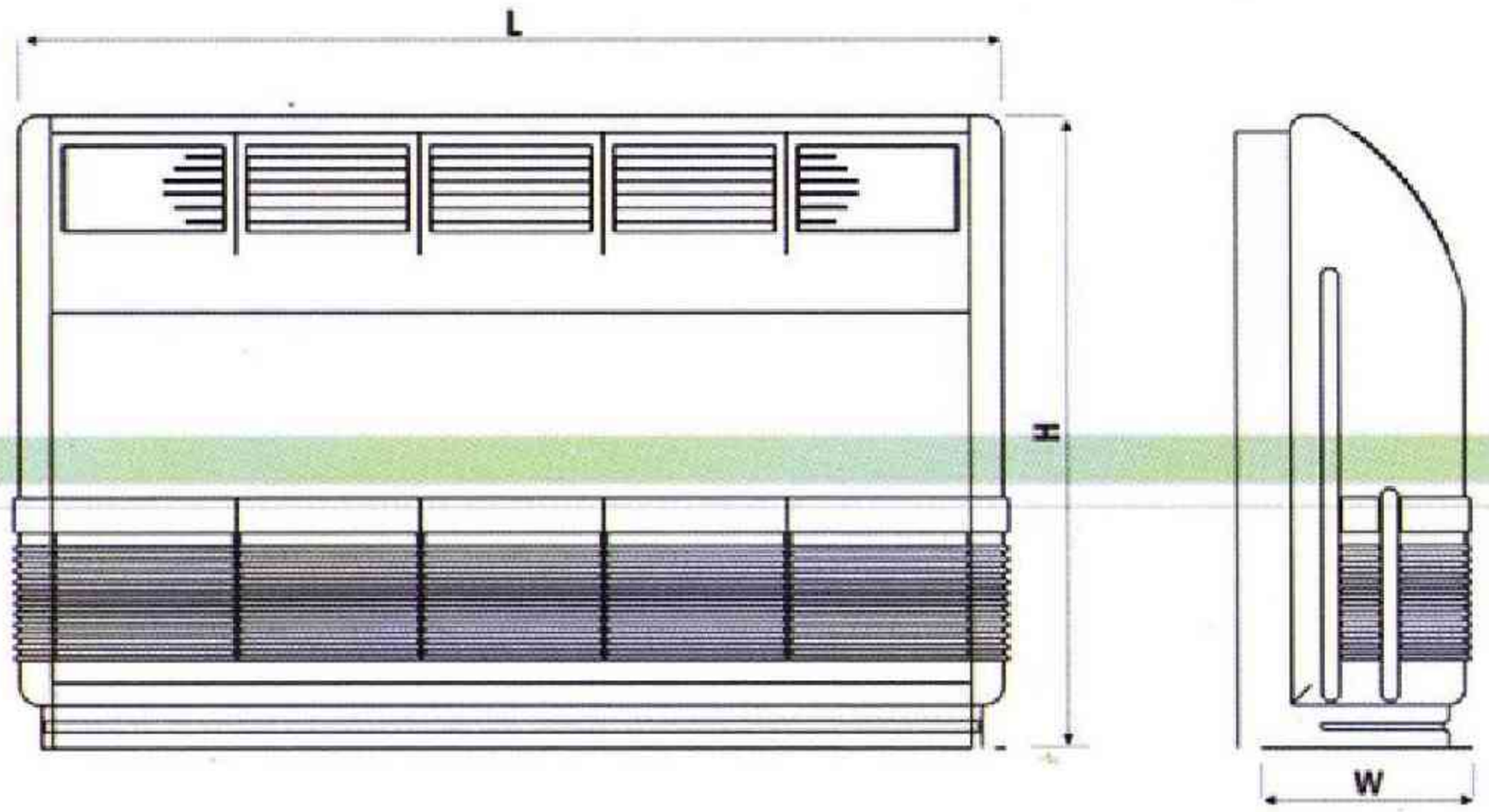

FAN -COILS MODEL	L (mm)	W (mm)	H (mm)	Conn. Size of coil (in.) NPS	ELECTRO MOTOR		Nominal air flow (cfm)
					No. of motor × nominal power(w)	Approximate high speed (rpm)	
OFC-SX-02	955	215	580	3/4"	1× 30 W	1100	200
OFC-SX-03	1135	215	580	3/4"	1× 30 W	1100	300
OFC-SX-04	1315	215	580	3/4"	1× 30 W	1100	400
OFC-SX-06	1495	215	580	3/4"	1× 30 W	1100	600
OFC-SX-08	1675	215	580	3/4"	2× 30 W	1100	800
OFC-SX-10	1855	215	580	3/4"	2× 30 W	1100	1000
OFC-SX-12	2035	215	580	3/4"	2× 30 W	1100	1200

Subject To Modification without notice

ISHRAI SATSA Member

Hygienic Air Handling Unit

Specification

Hygienic Air Handling Unit was designed by R&D department in order to ensure healthy, fresh and clean air handling in buildings.
The fundamental of the design could be summarized as to create a clearable structure not allowing dust accumulation. The basic concept underlying the design, can be summarized as developing a structure that does not allow for the accumulation of dust and dirt and ensure that cleanup is controllable.
The observation glass and internal Illumination allows for the visibility and control ability of internal hardware.

Body Structure

- Aluminum Profile frame
- 50 mm thick heat isolated
- Use of closed cell, sealed joints
- Illumination fixtures inlaid, not running over to cells and cleanable
- Coated Panels or stainless steel panels or furnace painted panels

Corrosion Endurance

- Coated Galvanized or furnace paint over galvanize or stainless steel internal hult in all panels. (Optional)
- Frame consisting of profile frames with coated galvanized steel panels
- Use of copper collector to prevent the corrosion of heater and cooler collector surfaces due to humidity
- Condensing pan that dose not hold water
- Drift elimination made of polypropylene profiles. (Optional)
- Opposed blade air dampers manufactured of aluminum profile, with hidden gear, having airfoil wings with joints and suitable for automatic control applications

Seating Elements

- Has a structure that prevents microbiologic reproduction
- Based on neoprene that is resistant to disinfectants
- Chemically and physically cleanable

Fans

- Cleanable, backward inclined, radial fans with few wings are used, These fans are suitable for revolution control, with the frequency converter.
- Plug fan with few wings have been used for easy cleaning

Filters

- Filter cases with clips have been used to prevent filter leaks
- Prevents microbiologic reproduction
- Filter sealing have been ensured with closed cell joints
- Manometer for tracking of filter pressure drops (optional)
- Filters can easily be dismounted and mounted, due to filter cases

Subject To Modification without notice

OMRAN TAHVIEH

Omran Tahvieh Industrial Co.

Heating , Ventilation And Air Conditioning

Patents:

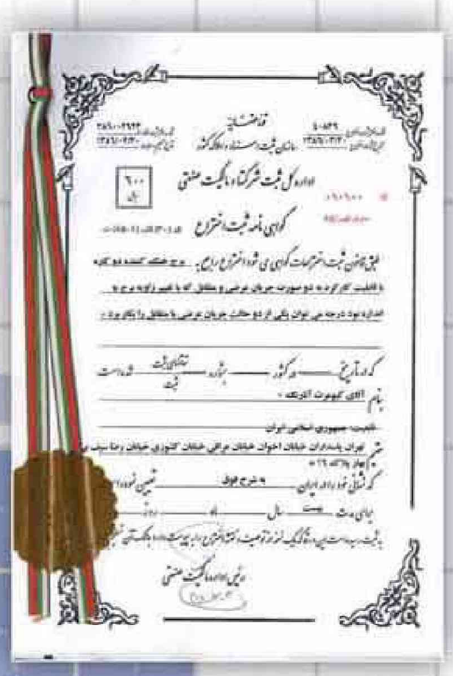
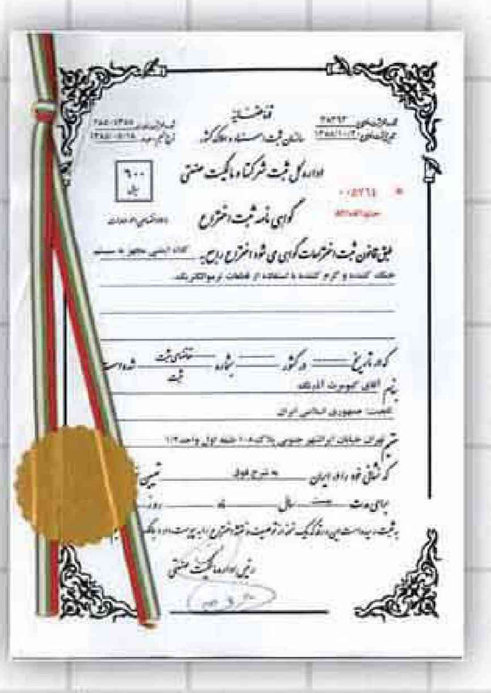
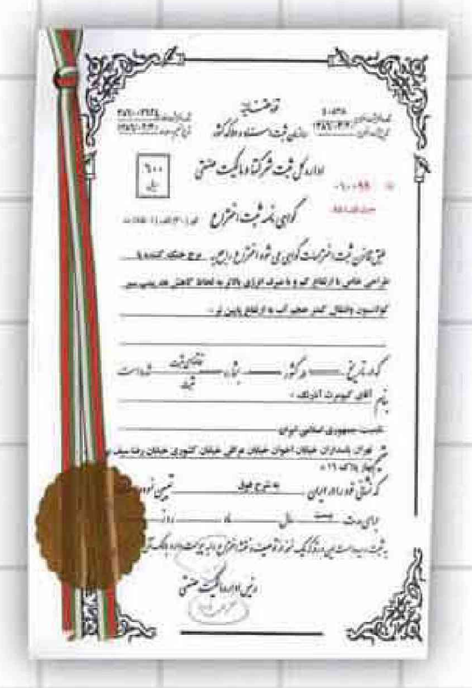
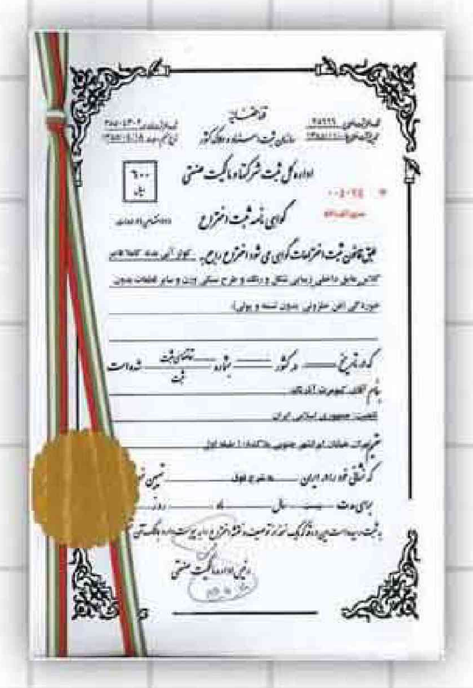

Industrial cooling tower

Fiber glass cooling tower - 8 to 1250 tons

Trapezoidal and Cubic cooling tower - 15 to 1200 tons

Centrifugal cooling tower - 5 to 1400 tons

Air cooled andWater cooled liquid chiller - 10 to 490 tons

Air cooled and Water cooled packaged unit 3to100 tons

Air handling unit - 2400 to 100000 CFM

Heat recovery - Heat pipe , Plate and Rotary

Condensing unit - 2 To 75 Tons

Room and Ducted fan coil - 200 To 2000 CFM

Fluid cooler - 5000 To 6000000 BTU/h

Heat exchanger - Shell & Tube & Coils

Air cooled condenser - 2000 To 2600000 BTU/h

Air washer - class 8 , 6 and 4

Zent 1500 To 30000 CFM

Humidifier - 0.5 To 100 l/h

Fan : centrifugal and axial

De Humidifier - Industrial and commercial

Evaporative Air Cooler

Unit heater - Hot water and steam

Air conditioner 6000 To 100000 BTU/h

Mini chiller

Air curtain - industrial , commercial , residential

Special Cooling Towers

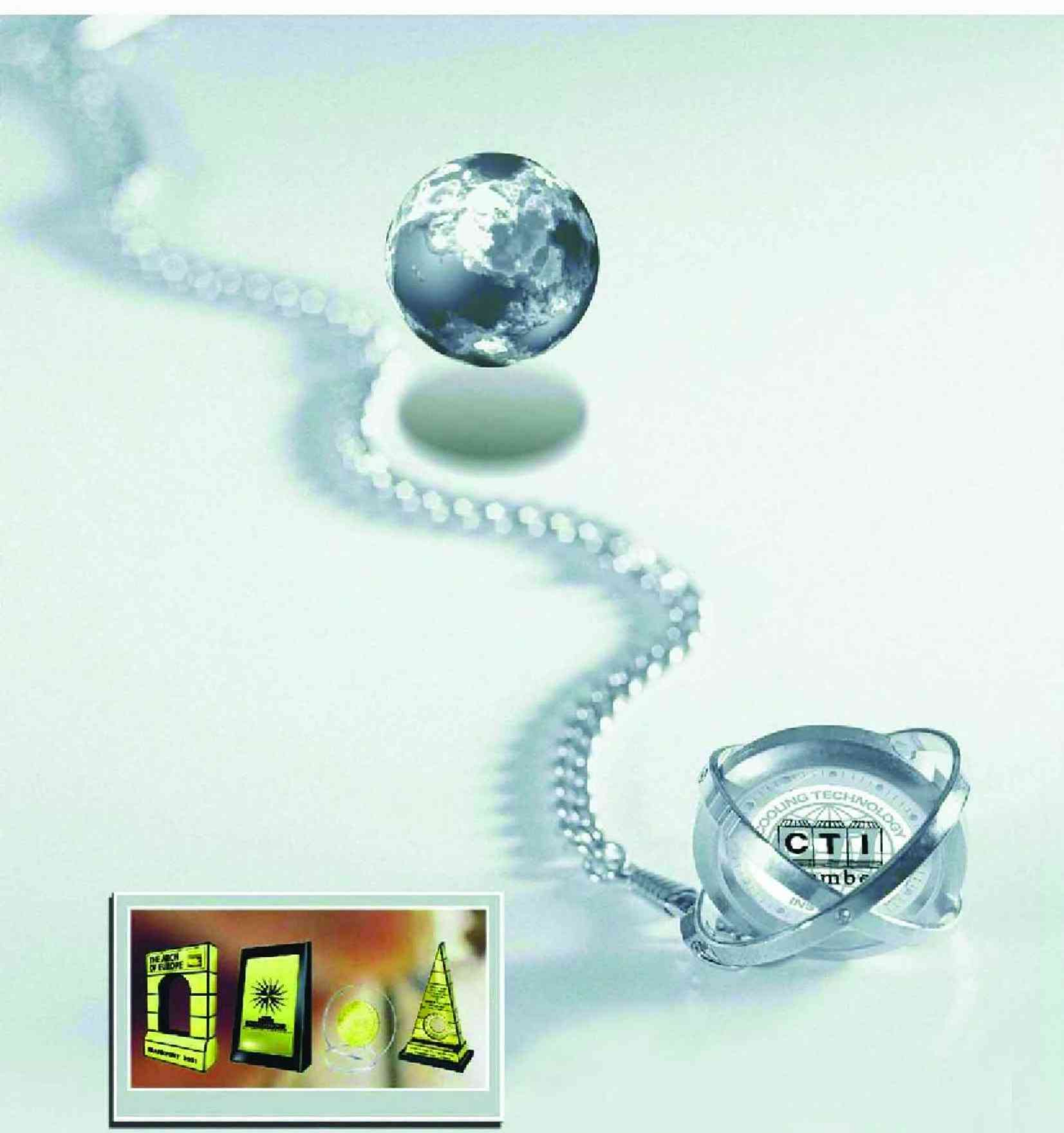

International Gold Award For Management And Quality And Technology Of Europe Quality Convention 2001-2002

Golden Arch of Technology And Quality 2003 - Frankfurt

شرکت صنعتی عمران تهویه (تولید کننده دستگاههای تهویه مطبوع)

دفتر شماره ۱ (فروش): تهران – خیابان پاسداران – بوستان دوم – خیابان عراقی – خیابان کشوری – خیابان ملکی نسب – خیابان بهاران – بن بست بهار – پلاک ٤

تلفن: ۲۲۵۱٤۱۲۹-۶ و ۲۲۳۲٤۹۶۵-۹ و ۲۲۳۲٤۳۷۸ – ۲۲۵۳۱۰۰۷-۲۲۵۳۰۹۵۹-۲۲۵۳۱۰۵۹-۲۲۵۳۰۹۸۶-۲۲۳۰۷۲۰۹

کارخانه A: شهرک صنعتی پرند – خیابان نو آوران تلفن: ۷ و ۵۶٤۱۹۳۰۶ - ۳۳و۳۱و ۵۶٤۱۸٤۳۰

Office1: (Sales office) No. 4, BAHAR Dead-end, BAHARAN Alley, MALEKI NASAB St.
KESHVARI St., ARAGHI St., 2 nd BOUSTAN, PASDARAN St., TEHRAN, IRAN
TEL&FAX:+98(21)22324378,9 – 22324965,6 – 22514129 – 22307209 – 22531059 -22530986
22530959-22531007 **Web Site : www.omrantahvieh.com** **Email:info@omrantahvieh.com**